phd®

Best Price
Best Design
Best Delivery

SERIES GRM

Workholding Clamps

Sizes 1, 2, & 4

ISO 9001 REGISTERED
Quality Management System Certified

GRM124

PHD is a member of the MAC Distributor Network

phd® SOLUTIONS FOR INDUSTRIAL AUTOMATION

www.phdinc.com

GRM

Workholding Clamps

The Series GRM Clamp continues to be the industry-leading pneumatic actuator of choice for material handling solutions worldwide. Its simple design and rugged construction have proven customer satisfaction and loyalty since 1998. Three standard sizes (25, 32, and 40mm bores), 13 standard jaw styles, and countless options and accessories, make the Series GRM Clamp the most versatile and modular clamp in the world.

Each and every aspect of the Series GRM Clamp was influenced by you, our customer. We pride ourselves in providing a product that suits your specific application needs. The Series GRM Clamp is a product that is meant to work for you and not a product that you make work. Contact your local distributor or PHD to learn more about Series GRM Clamps.

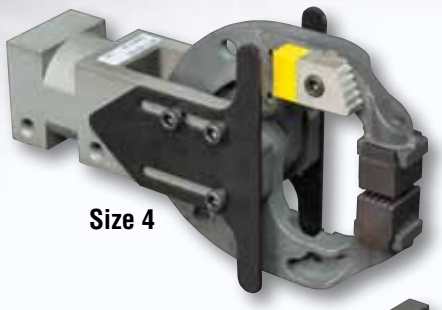

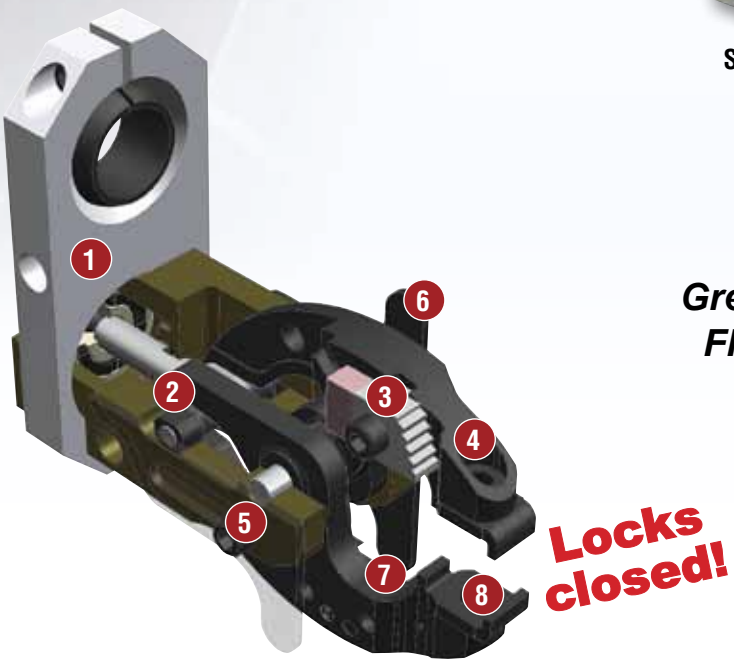

Greater Clamping Forces, Flexibility, Durability, & Low Cost

Product Features

1. **Fixed or spherical mounting brackets** for side or rear mounting
2. **Cam design** locks clamp in the closed position ensuring part retention if air pressure is lost
3. **Adjustable rotation stop** allows for multiple jaw openings in one clamp (Sizes 2 and 4)
4. **Interchangeable hardened-steel jaws** minimize costly inventory and maximize wear resistance for long life
5. **Field repairable** in 10 minutes using metric hex wrenches
6. **Adjustable hardened-steel impact plates** eliminate damage to body from panel impact
7. **Wide and deep jaw throats** accommodate difficult clamping applications
8. **Self-locking internal threads** throughout eliminate need for thread locking adhesives or additional locking components

Major Benefits

SHIPS IN 24hrs from receipt of order
Some restrictions may apply

- Simple design
- Compact envelope size
- Long life
- High grip force
- Fast field maintenance
- Jaws lock in the closed position ensuring part retention if air pressure is lost due to line rupture or power loss
- Lowest cost of ownership
- Proven design for longevity
- Modular jaws and tips - easily changed
- Non-adjustable color-coded tips
- Modular mounting brackets
- Adjustable jaw rotations
- Hardened adjustable impact plates
- Integral shock pads
- Imperial and metric ports and mounting

© Copyright 2016, by PHD, Inc. All Rights Reserved. Printed in the U.S.A.
(800) 624-8511
www.phdinc.com/grm

phd SOLUTIONS FOR INDUSTRIAL AUTOMATION

How to Use This Catalog

The Series GRM Clamp is a highly modular pneumatic device, meaning it is capable of many configurations suitable for your specific application needs. This catalog uses a step-by-step approach that walks you through the selection and ordering process for Series GRM Clamps. You will find each section of the catalog targets the specific attributes (options) of the clamp (i.e., mounting options, jaw style options, tip options).

At the beginning of each section you will find basic questions related to the options you are investigating. These questions will help you narrow your search and allow for informed decision making. If you are still not sure of your selections and require additional assistance, please contact your local distributor or PHD for technical support. We will be happy to assist you.

Table of Contents ..... Page

Ordering Directions.....4
Step 1 Model.....5
Step 2 Unit Size.....6
Step 3 Mounting 8
Step 4 Jaw Styles & Openings 20
Step 5 Design Number.....40
Step 6 Tips.....42
Step 7 Port Fittings 60
Step 8 Accessory Options.....62
Exploded Assemblies 82
Rebuild Program.....93
Other Clamp Solutions.....94

E-Tools

Designer's Resource myphd®

CAD & Sizing Assistance

Use PHD's free online Product Sizing and CAD Configurator

www.phdinc.com/myphd

For GRM product videos, animated application design examples, and guided tours, visit our Learn site.

Learn
learn.phdinc.com

Patents

UNITED STATES	INTERNATIONAL
US 5,941,513	EP 0 935 516 B1
US 6,048,013	EP 1 004 410 B1
US 6,056,281	EP 1 415 773 B1
US 6,176,533 B1	
US 6,227,586 B1	
US 6,273,408 B1	
US 6,276,733 B1	
US 6,302,462 B2	
US 6,322,118 B2	
US 6,425,616 B2	
US 6,557,916 B2	
US 6,575,512 B2	
US 6,588,816 B1	
US 6,641,189 B2	
US 6,948,708 B2	
US 7,032,944 B2	

phd® SOLUTIONS FOR INDUSTRIAL AUTOMATION

WORLD HEADQUARTERS:
PHD, Inc.
9009 Clubridge Drive
P.O. Box 9070
Fort Wayne, IN 46899 U.S.A.
Phone (260) 747-6151
Fax (260) 747-6754
phdinfo@phdinc.com

EUROPE OFFICE:
PHDinEurope GmbH
Zum Carl-Alexander-Park 6
52499 Baesweiler, Germany
Phone +49 (0)2401 619 77 0
Fax +49 (0)2401 619 77 99
info@PHDinEurope.de

中国办事处:
北京市西城区西直门外大街1号院
西环广场A座15层A3
邮编: 100044
电话: 86-10-5830 1122-825
传真: 86-10-5830 1500
电邮: jwei@phdinc.com

INDIA OFFICE:
335, Udyog Vihar, Phase-IV
Gurgaon - 122015. India
Phone : +91-124-4356451
Fax : +91-124-4308207
msaxena@phdinc.com

This catalog uses a step-by-step approach that walks you through the selection and ordering process for Series GRM Clamps. You will find each section of the catalog targets the specific attributes (options) of the clamp (i.e., mounting options, jaw style options, tip options).

Helpful reminder:
Look for the shaded headers and charts throughout the catalog that correspond to the colors shown in the frames below.

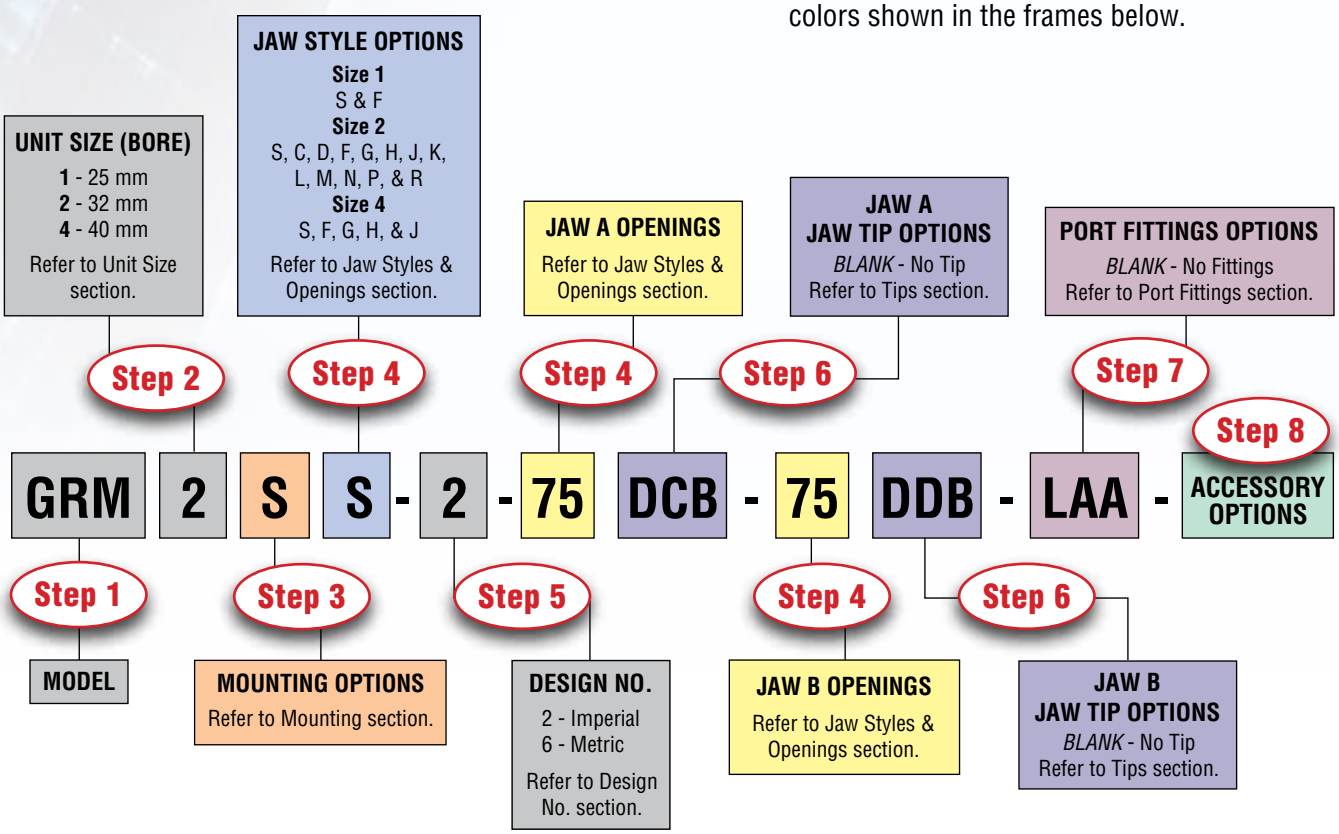

Step 1 - Model: GRM

This step is already done for you. GRM is the 3 digit prefix used by PHD to define this product line.

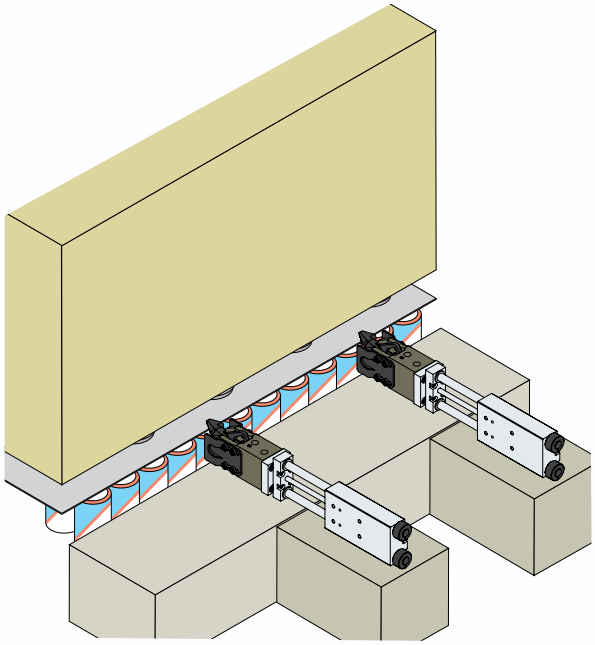

Two GRM1xS clamps grab slip sheet between layers of cans in depalletizing machine

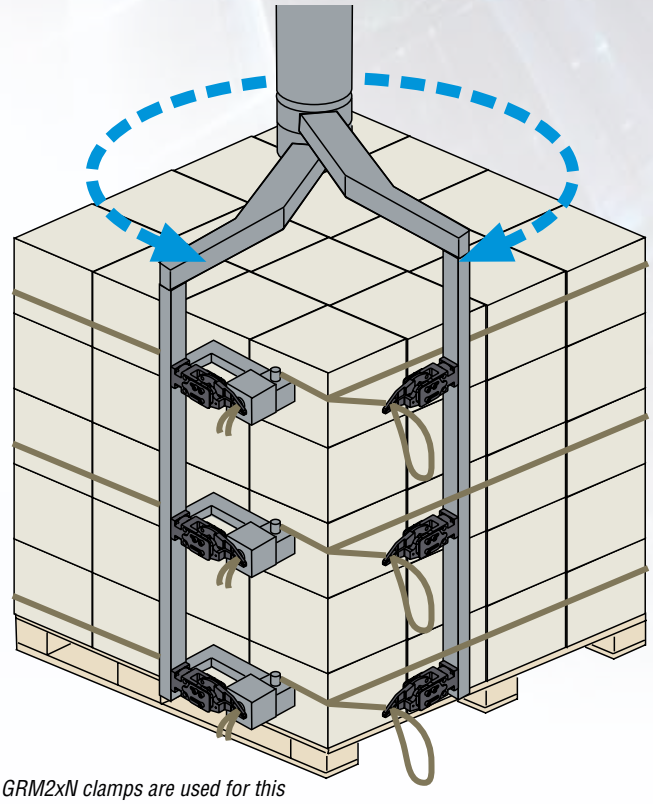

Six GRM2xN clamps are used for this automated pallet binding machine.

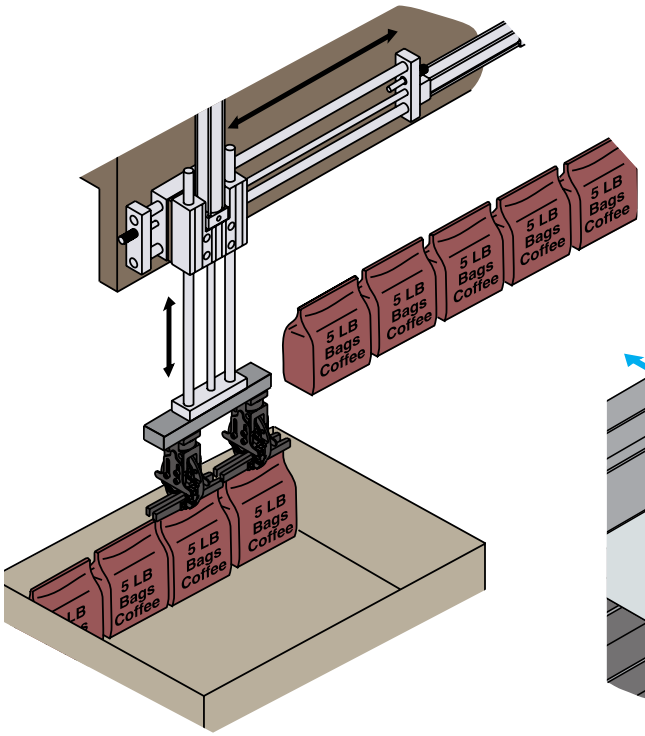

Two GRM2xS clamps are used in coffee packaging application to move filled bags from conveyor to cartons.

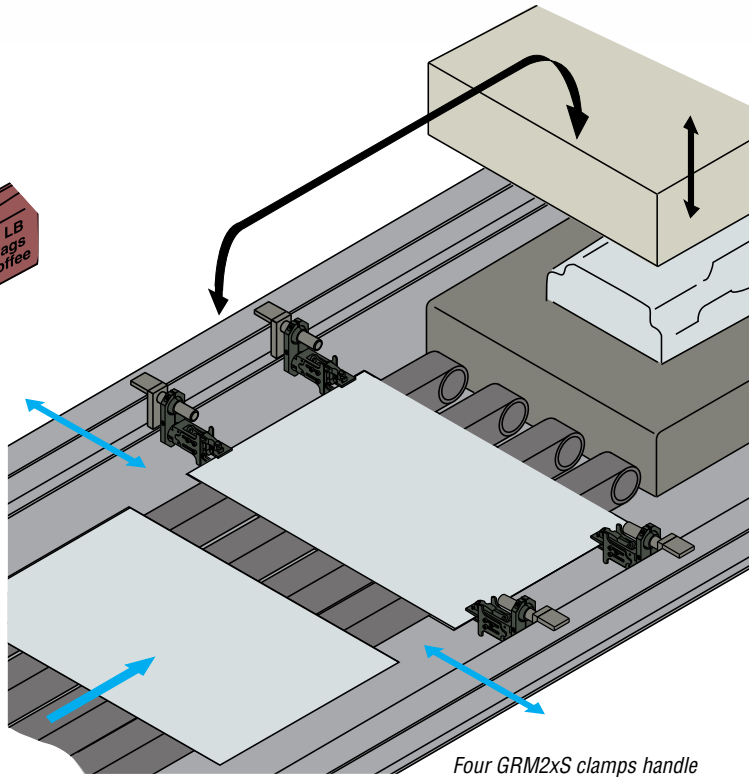

Four GRM2xS clamps handle sheet metal for automotive/metal stamping press.

Step 2 - Unit Size

Choosing the correct size of GRM Clamp depends solely on the application. Knowing the answers to the following questions will help refine the selection process. If you are still unsure about your application and sizing selection, contact your local distributor or a member of PHD for assistance.

(Refer to charts on page 7.)

1. Does your application have space restrictions?

a. Yes – GRM1 (small), GRM2 (medium), GRM4 (large)

b. No – All GRM Clamps apply

c. Unsure – Refer to Chart 1 Unit Size Comparison for base unit envelope sizes and remember to include bolt-on options and accessories in your space calculations.

2. Does your application have weight restrictions?

a. Yes – GRM1 (light), GRM2 (medium), GRM4 (heavy)

b. No – All GRM Clamps apply

c. Unsure – Refer to Chart 1 Unit Size Comparison for base unit weights and remember to include bolt on options and accessories in your weight calculations.

3. What is the minimum air pressure that will be available for each clamp?

a. Above 60 psi [4 bar] – All GRM Clamps will cycle at 30 psi [2 bar] minimum, but PHD recommends a minimum of 60 psi [4 bar] for continuous operation.

b. Below 60 psi [4 bar] – Consult your local distributor or PHD Customer Service.

4. Does your application have grip force requirements [(1)]?

a. Yes – GRM1 (0 – 225 lb [0 – 1001 N])
GRM2 (0 – 676 lb [0 – 3007 N])
GRM4 (0 – 875 lb [0 – 3892 N])

b. No – All GRM Clamps apply

c. Unsure – Refer to Chart 1 Unit Size Comparison for total grip force or B08 and B10 options in the Accessory Options section for increased grip force.

5. Are there variables that will negatively affect the carrying capability of the clamp such as lubricants and fluids or low friction coatings [(2)]?

a. Yes – Consult your local distributor or PHD Customer Service

b. No – All GRM Clamps apply

NOTES:

1) Total grip force is based on 87 psi [6 bar] air pressure.

2) Variables associated with friction coefficients (external fluids, surface finish, coatings, plating, tip selection, air pressure, and others) may affect the performance of the clamp in its ability to grip and hold the work piece rigidly, without slippage, and/or loss of control of the part.

UNIT SIZE COMPARISON (CHART 1)

JAW STYLES	SIZE	TOTAL GRIP FORCE(1) (2)		MAX. ENVELOPE SIZE(3)						MAX. WEIGHT(4)		PAGE
				LENGTH		WIDTH		HEIGHT				
		lb	N	in	mm	in	mm	in	mm	lb	kg	
S	1	225	1001	4.724	120.0	1.771	45.0	3.170	80.5	0.97	0.44	22
	2	225	1001	6.453	163.9	2.336	59.3	5.444	138.3	2.10	0.95	
	4	500	2224	8.799	223.5	2.662	67.6	6.894	175.1	4.20	1.91	
C & D	2	225	1001	6.453	163.9	2.336	59.3	5.121	130.1	2.00	0.91	24
F	1	180	801	5.721	145.3	2.106	53.5	3.211	81.6	1.23	0.56	26
	2	225	1001	6.699	170.2	2.291	58.2	4.438	112.7	2.10	0.95	
	4	500	2224	9.110	231.4	2.941	74.7	5.885	149.5	4.30	1.95	
G	2	225	1001	6.713	170.5	2.336	59.3	6.616	168.0	2.30	1.04	28
	4	500	2224	8.996	228.5	2.662	67.6	8.201	208.3	4.20	1.91	
H & J	2	225	1001	6.820	173.2	2.336	59.3	4.488	114.0	2.10	0.95	30
	4	500	2224	9.429	239.5	2.662	67.6	5.989	152.1	4.20	1.91	
K	2	225	1001	6.804	172.8	2.291	58.2	4.184	106.3	2.00	0.91	32
L & M	2	225	1001	7.065	179.5	2.750	69.9	4.498	114.2	2.70	1.22	34
N & P	2	225	1001	6.403	162.6	2.336	59.3	4.970	126.2	1.90	0.86	36
R	2	330	1468	5.748	146.0	2.336	59.3	4.060	103.1	1.96	0.89	38

NOTES:
1) Based on 87 psi [6 bar] air pressure .
2) Refer to B08 and B10 options in Accessory Options section for increased grip force.
3) Maximum envelope size of base unit without options.
4) Maximum weight of base unit without options.

MAX. ENVELOPE SIZE

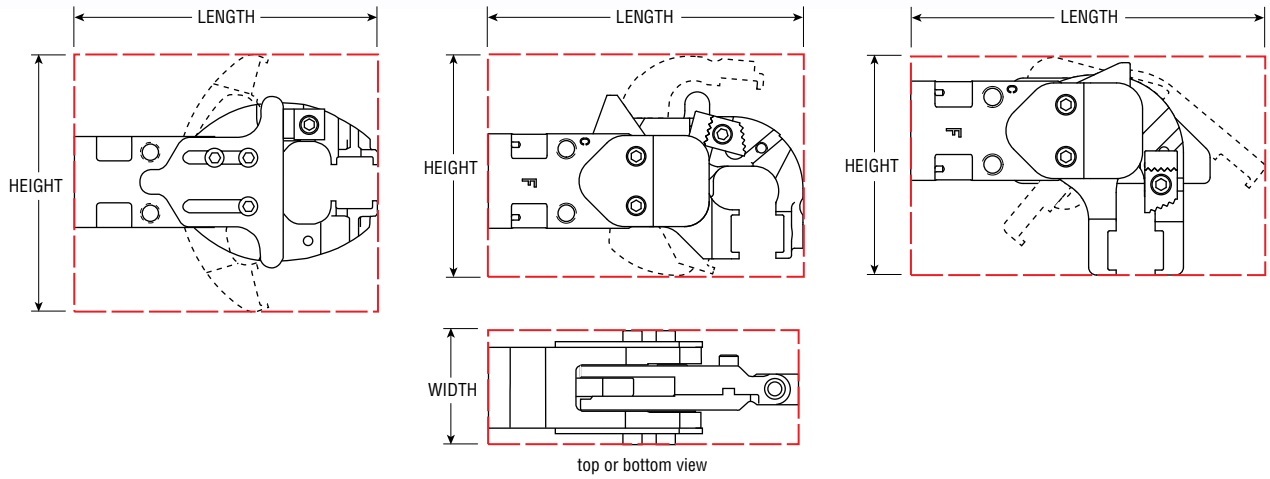

UNIT SIZE COMPARISON (CHART 2)

SIZE	CYLINDER PARAMETERS(1)								CYCLE TIME OPEN OR CLOSE(2)	PRESSURE LIMITS				TEMPERATURE LIMITS(3)			
	BORE Ø		MAX. STROKE		DISPLACEMENT					min		max		min		max	
					OPEN		CLOSE										
	in	mm	in	mm	in³	cm³	in³	cm³	sec	psi	bar	psi	bar	°F	°C	°F	°C
1	0.984	25.0	0.715	18.2	0.54	8.8	0.49	8.0	0.20	30	2	100	7	-20	-30	180	82
2	1.260	32.0	0.914	23.2	1.14	18.7	1.03	16.9	0.19								
4	1.575	40.0	1.228	31.2	2.39	39.2	2.18	35.7	0.14								

NOTES:
1) Refer to B08 and B10 options in Accessory Options section for other cylinder parameters.
2) Based on 87 psi [6 bar] air pressure.
3) Refer to G11 option in Accessory Options section for high-temp applications.

All dimensions are reference only unless specifically toleranced.

Step 3 - Mounting

PHD has a wide variety of standard and accessory mounts available for the Series GRM Clamp. Use the following questions and graphical representations to help in your selection process. If you are unable to locate a mount that suits your application needs, contact your local distributor or a member of PHD for assistance.

1. What will the clamp be mounted to?

a. Rigid surface – P or T or B12, B14, and B16 options in the Accessory Options section

b. Tubing – All mounts except P or T or B12, B14, and B16 options in the Accessory Options section

2. Does the mount need to be adjustable?

a. Yes – All mounts except P or T or B12, B14, and B16 options in the Accessory Options section

b. No – P or T or B12, B14, and B16 options in the Accessory Options section

3. Do you require a metric clamp (1/8 BSPP ports) with metric mounting or imperial clamp (1/8 NPT ports) with imperial mounting [1] [2] [3]?

a. Yes – All metric clamps come standard with metric mounting and all imperial clamps come standard with imperial mounting.

b. No – Go to question 4

4. Do you require a metric clamp (1/8 BSPP ports) with imperial mounting [1] [2] [3]?

a. Yes – P, T, M03, M25, M27, M29, M39, M40, M44-M47

b. No – See question 5

5. Do you require an imperial clamp (1/8 NPT ports) with metric mounting [1] [2] [3]?

a. Yes – P, T, M01, M07, M21-M24, M28, M30, M36-M38, or M41-M43

b. No – See question 3

6. Does the clamp need to be a drop-in replacement for a competitive product?

a. Yes – Consult your local distributor or PHD Customer Service and provide make, model number, and mounting requirements of the competitive product (mounting pattern/ tubing dimensions and tolerances requested).

b. No – All mounts apply

7. How to order [4] [5]?

a. For standard mounts A, B, C, P, R, S, T, or W

Example ordering data: GRM2**A**S-2-45SDB-45SDB-LAA

b. For accessory mounts Mxx

Example ordering data: GRM2**T**S-2-45SDB-45SDB-LAA-**M01**

c. For GRM1 standard mounts C, R, S, or W

Example ordering data: GRM1**C**S-2-50SDB-50SDB-LAA-**B11**

d. For GRM1 accessory mounts Mxx

Example ordering data: GRM1**T**S-2-50SDB-50SDB-LAA-**B11** -**M01**

NOTES:

1) Unless otherwise specified, metric units have metric ports and mounting. Imperial units have imperial ports and mounting.

2) Rear mounting plate (P option) will accommodate metric and imperial fasteners. See mounting bracket dimensions page.

3) Rear mounting threads (T option) come standard on all Series GRM Clamps and are metric only. See mounting bracket dimensions page.

4) B11 option required for Series GRM1 Clamps when specifying standard or accessory side mounting brackets. Rear mounting brackets are not available for Series GRM1 Clamps. See B11 option in Accessory Options section.

5) Rear mounting threads (T option) must be specified when ordering an accessory mount (Mxx option).

In addition to these mounting options, we have created custom mounting brackets for specific applications. Some examples of these specials are:

A	Rear Compliant Mounting Bracket that can rotate up to ±15° to grip a panel that is not oriented properly. This bracket then self-centers itself after releasing the panel.
B	Rear mounting brackets with solid or hollow shapes or spherical balls for adjustability.
C	Mounting brackets such as angle brackets that mount to the side of the clamp body.
D	Side mounting spherical or non-spherical brackets that can accommodate square or round mounting tubes up to 1-1/2 in or 40 mm.
E	Side Mounting Bracket with a fixed spherical ball.

Mounts rotate around the clamp

Clamp body rotates around the tube

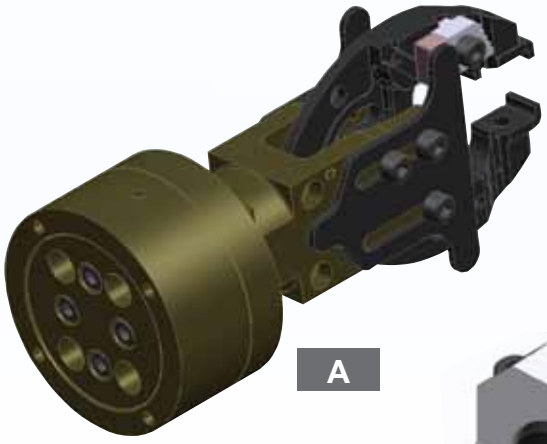

A

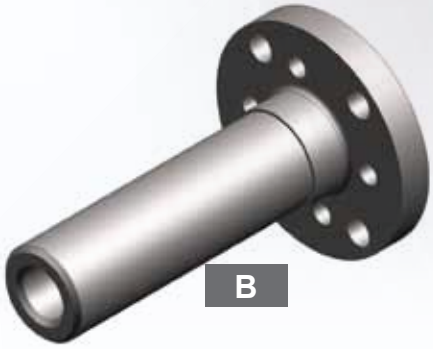

B

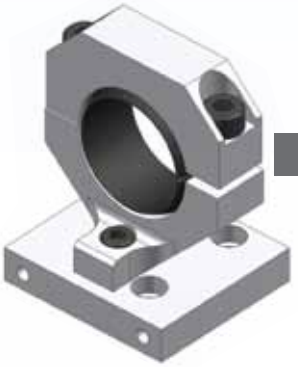

B

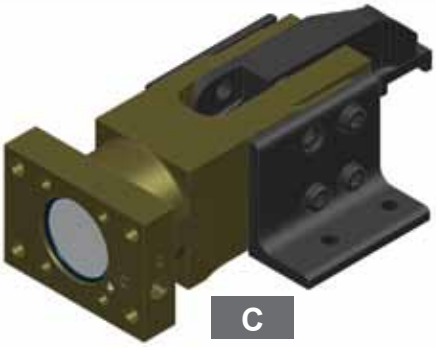

C

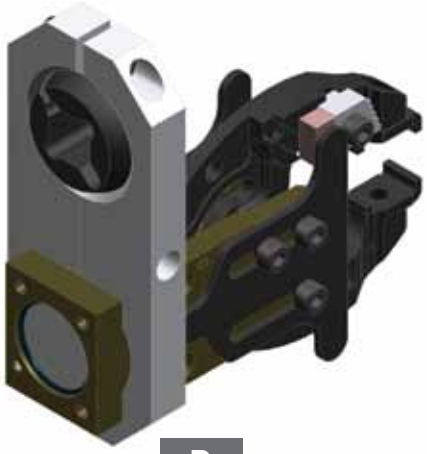

D

D

E

ORDERING DATA:

GRM 2 S S - 2 - 45 - 45 - Mxx

- **2** — CLAMP SIZE: 1 - GRM1, 2 - GRM2, 4 - GRM4
- **S** — STANDARD MOUNTS
- **2** — DESIGN NO.: 2 - Imperial, 6 - Metric
- **Mxx** — ACCESSORY MOUNTS

Note: Rear mounting threads (T option) must be specified when ordering an accessory mount (Mxx option).

90° SPHERICAL MOUNTING BRACKET

MODEL NUMBER OR ACCESSORY CODE	MOUNTING TUBE SIZE
GRMx**C**x-2	1.0 in
GRMx**C**x-6	25.0 mm
GRMx**T**x-**2**-**M21**	25.0 mm
GRMx**T**x-**6**-**M39**	1.0 in

NON-SPHERICAL MOUNTING BRACKET

MODEL NUMBER OR ACCESSORY CODE	MOUNTING TUBE SIZE
GRMx**R**x-2	1.0 in
GRMx**R**x-6	25.0 mm
GRMx**T**x-**2**-**M22**	25.0 mm
GRMx**T**x-**6**-**M46**	1.0 in

SPHERICAL MOUNTING BRACKET

MODEL NUMBER OR ACCESSORY CODE	MOUNTING TUBE SIZE
GRMx**S**x-2	1.0 in
GRMx**S**x-6	25.0 mm
GRMx**T**x-**2**-**M23**	25.0 mm
GRMx**T**x-**6**-**M47**	1.0 in

OVERSIZE SPHERICAL MOUNTING BRACKET

MODEL NUMBER OR ACCESSORY CODE	MOUNTING TUBE SIZE
GRMx**W**x-2	1.25 in
GRMx**W**x-6	33.3 mm
GRMx**T**x-x-**M01**	30.0 mm
GRMx**T**x-x-**M07**	32.0 mm
GRMx**T**x-**6**-**M25**	1.25 in
GRMx**T**x-**2**-**M42**	33.3 mm

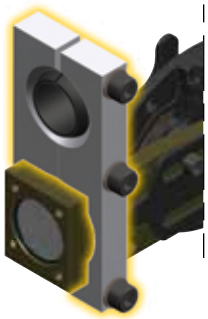

M27-M30
M36-M37

SPHERICAL MOUNTING BRACKET WITH M8 FASTENERS

ACCESSORY CODE	MOUNTING TUBE SIZE
GRMx**T**x-x-**M27**	1.0 in
GRMx**T**x-x-**M28**	25.0 mm
GRMx**T**x-x-**M29**	1.25 in
GRMx**T**x-x-**M30**	33.3 mm
GRMx**T**x-x-**M36**	30.0 mm
GRMx**T**x-x-**M37**	32.0 mm

M38

SPHERICAL MOUNTING BRACKET FOR SQUARE TUBING

ACCESSORY CODE	MOUNTING TUBE SIZE
GRMx**T**x-x-**M38**	19.0 mm

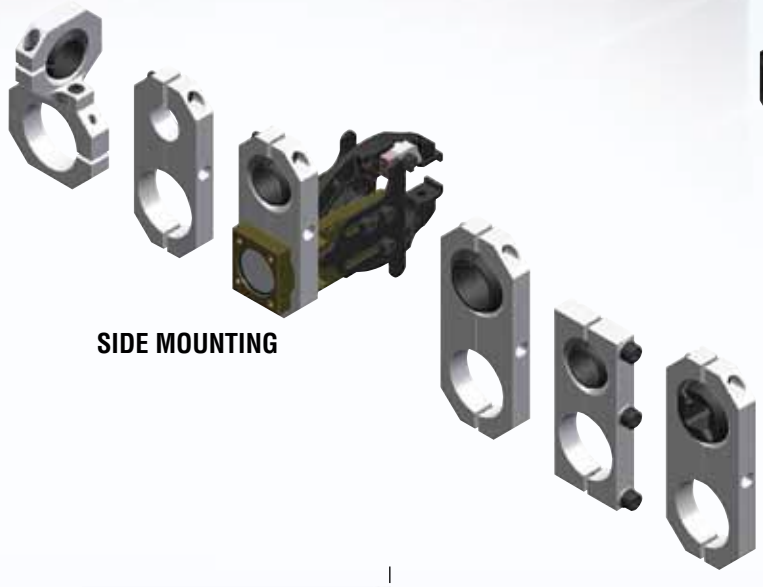

SIDE MOUNTING

REAR MOUNTING

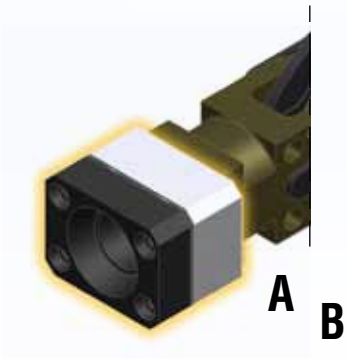

A B

GRM2xx OR GRM4xx	
MODEL NUMBER OR ACCESSORY CODE	MOUNTING TUBE SIZE
GRMx**A**x-2	1.0 in
GRMx**A**x-6	25.0 mm
GRMx**B**x-2	1.25 in
GRMx**B**x-6	33.3 mm
GRMx**T**x-**2**-**M24**	25.0 mm
GRMx**T**x-**2**-**M43**	33.3 mm
GRMx**T**x-**6**-**M44**	1.0 in
GRMx**T**x-**6**-**M45**	1.25 in

Note: Spherical or Non-spherical in one mount

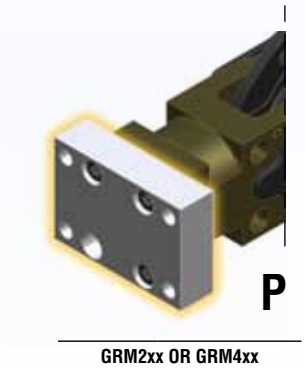

P

GRM2xx OR GRM4xx	
MODEL NUMBER	MOUNTING FASTENER SIZE
GRM2**P**x	1/4 [M6]
GRM4**P**x	5/16 [M8]

T

MODEL NUMBER	MOUNTING THREAD SIZE
GRM1**T**x	M5 x .450 [11.4] DP
GRM2**T**x	M6 x .413 [10.5] DP
GRM4**T**x	M8 x .512 [13.0] DP

M03

GRM2xx OR GRM4xx		
ACCESSORY CODE	INTERNAL MOUNTING DIAMETER	EXTERNAL MOUNTING DIAMETER
GRMx**T**x-x-**M03**	1.0 in [25.0 mm]	1.874 in [47.6 mm]

M40-M41

GRM2xx OR GRM4xx	
ACCESSORY CODE	MOUNTING TUBE SIZE
GRMx**T**x-x-**M40**	1.0 in
GRMx**T**x-x-**M41**	25.0 mm

Note: Spherical or Non-spherical in one mount

GRMx C x or GRMxTx- M21 M39 90° SPHERICAL MOUNTING BRACKET

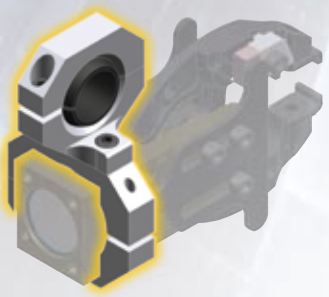

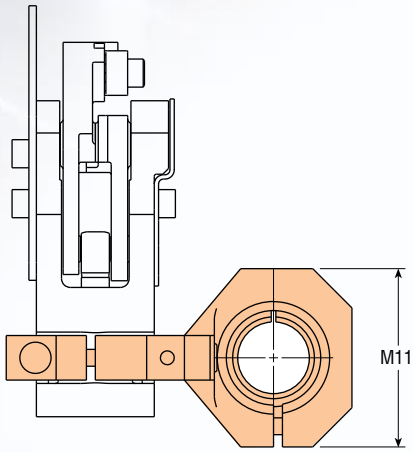

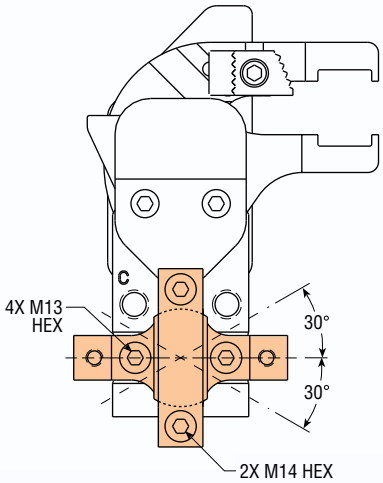

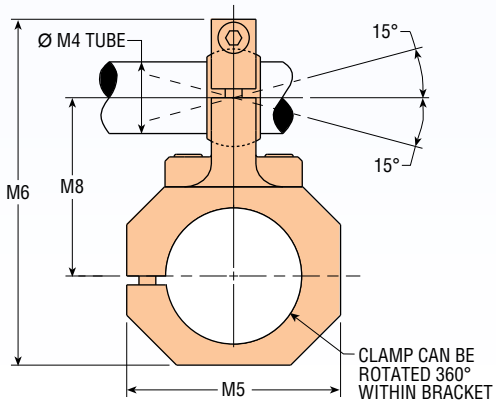

LETTER DIM	MODEL NUMBER GRM1-B11 & GRM2 in	GRM1-B11 & GRM2 mm	GRM4 (GRM2-B08) in	GRM4 (GRM2-B08) mm
M4 (C)	1.000	25.0	1.000	25.0
M4 (M21)	25.0 mm		25.0 mm	
M4 (M39)	1.000 in		1.000 in	
M5	3.000	76.2	3.500	88.9
M6	4.850	123.2	5.900	149.9
M8	2.500	63.5	3.350	85.1
M11	2.500	63.5	2.500	63.5
M13	0.197	5.0	0.197	5.0
M14	0.236	6.0	0.236	6.0

CLAMP SIZE	KIT NUMBER IMPERIAL	METRIC	M21	M39	WEIGHT ADDER lb	kg
1-B11	64658-02	64658-03	64658-03	64658-02	0.62	0.28
2	64658-02	64658-03	64658-03	64658-02	0.62	0.28
4, 2-B08	64658-04	64658-05	64658-05	64658-04	0.99	0.45

GRMx R x or GRMxTx- M22 M46 NON-SPHERICAL MOUNTING BRACKET

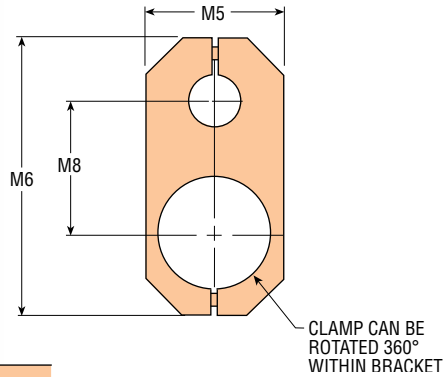

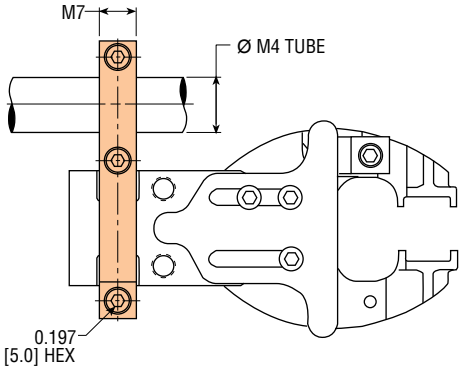

LETTER DIM	MODEL NUMBER GRM1-B11 & GRM2 in	GRM1-B11 & GRM2 mm	GRM4 (GRM2-B08) in	GRM4 (GRM2-B08) mm
M4 (R)	1.000	25.0	1.000	25.0
M4 (M22)	25.0 mm		25.0 mm	
M4 (M46)	1.000 in		1.000 in	
M5	2.244	57.0	2.618	66.5
M6	5.197	132.0	5.315	135.0
M7	0.625	15.9	0.750	19.1
M8	2.500	63.5	2.500	63.5

CLAMP SIZE	KIT NUMBER IMPERIAL	METRIC	M22	M46	WEIGHT ADDER lb	kg
1-B11	62149-02	62196-02	62196-02	62149-02	0.38	0.17
2	62149-02	62196-02	62196-02	62149-02	0.38	0.17
4, 2-B08	64646-02	64648-02	64648-02	64646-02	0.52	0.24

All dimensions are reference only unless specifically toleranced.

GRMx S x or GRMxTx- M23 M47 SPHERICAL MOUNTING BRACKET

GRMx W x or GRMxTx- M01 M07 M25 M42 OVERSIZE SPHERICAL MOUNTING BRACKET

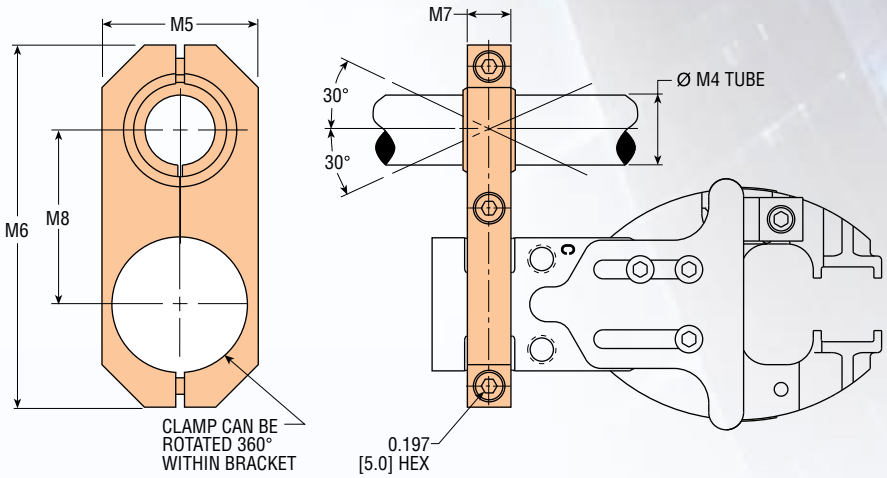

FOR SPHERICAL MOUNTING BRACKET:

LETTER DIM	MODEL NUMBER GRM1-B11 & GRM2 in	GRM1-B11 & GRM2 mm	GRM4 (GRM2-B08) in	GRM4 (GRM2-B08) mm
M4 (S)	1.000	25.0	1.000	25.0
M4 (M23)	25.0 mm		25.0 mm	
M4 (M47)	1.000 in		1.000 in	
M5	2.244	57.0	2.618	66.5
M6	5.197	132.0	5.315	135.0
M7	0.625	15.9	0.750	19.1
M8	2.500	63.5	2.500	63.5

CLAMP SIZE	KIT NUMBER IMPERIAL	METRIC	M23	M47	WEIGHT ADDER lb	kg
1-B11	62149-01	62196-01	62196-01	62149-01	0.49	0.22
2	62149-01	62196-01	62196-01	62149-01	0.49	0.22
4, 2-B08	64646-01	64648-01	64648-01	64646-01	0.64	0.29

FOR OVERSIZE SPHERICAL MOUNTING BRACKET:

LETTER DIM	MODEL NUMBER GRM1-B11 & GRM2 in	GRM1-B11 & GRM2 mm	GRM4 (GRM2-B08) in	GRM4 (GRM2-B08) mm
M4 (W)	1.250	33.3	1.250	33.3
M4 (M01)	30.0 mm		30.0 mm	
M4 (M07)	32.0 mm		32.0 mm	
M4 (M25)	1.250 in		1.250 in	
M4 (M42)	33.3 mm		33.3 mm	
M5	2.618	66.5	2.618	66.5
M6	6.064	154.0	6.299	160.0
M7	0.625	15.9	0.750	19.1
M8	3.130	79.5	3.130	79.5

CLAMP SIZE	KIT NUMBER IMPERIAL	METRIC	M01	M07	M25	M42	WEIGHT ADDER lb	kg
1-B11	62201-01	62201-03	65001-01	62223-04	62201-01	62201-03	0.86	0.39
2	62201-01	62201-03	65001-01	62223-04	62201-01	62201-03	0.81	0.37
4, 2-B08	64647-01	64649-01	65001-06	62223-05	64647-01	64649-01	0.92	0.42

All dimensions are reference only unless specifically toleranced.

GRMxTx- M27 M30 SPHERICAL MOUNTING BRACKET WITH M8 FASTENERS

GRMxTx- M36 M37 SPHERICAL MOUNTING BRACKET WITH M8 FASTENERS

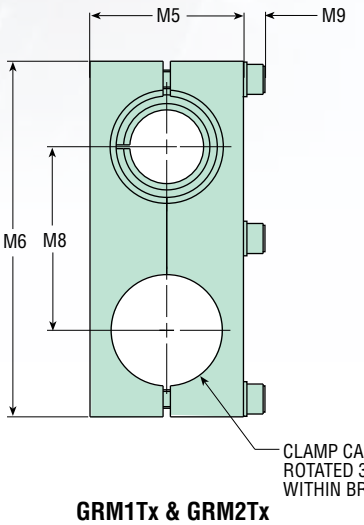

GRM1Tx & GRM2Tx

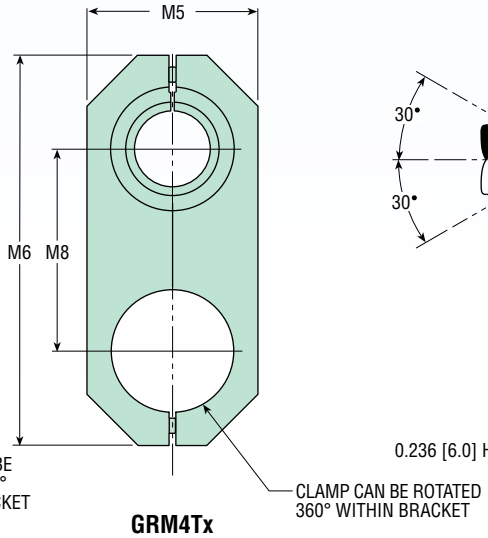

GRM4Tx

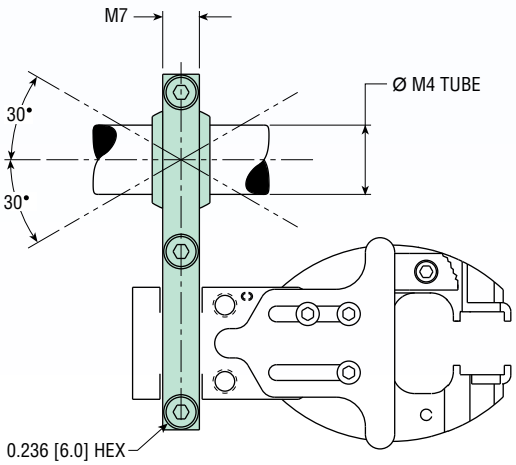

GRM1Tx-B11 & GRM2Tx

ACESSORY CODE	LETTER DIMENSION										
	M4	M5		M6		M7		M8		M9	
		in	mm	in	mm	in	mm	in	mm	in	mm
M27	1.000 in	2.244	57.0	5.197	132.0	0.625	15.9	2.500	63.5	0.374	9.5
M28	25.0 mm										
M29	1.250 in	2.618	66.5	6.064	154.0	0.625	15.9	3.130	79.5	0.374	9.5
M30	33.3 mm										
M36	30.0 mm	2.618	66.5	6.064	154.0	0.625	15.9	3.130	79.5	0.374	9.5
M37	32.0 mm										

GRM1Tx-B11 & GRM2Tx

ACCESSORY CODE	KIT NUMBER	WEIGHT ADDER	
		lb	kg
M27	62149-04	0.69	0.31
M28	62196-04	0.69	0.31
M29	62201-04	1.03	0.47
M30	62201-05	0.99	0.45
M36	65001-11	1.07	0.48
M37	62223-07	1.03	0.47

GRM4Tx (GRM2Tx-B08)

ACESSORY CODE	LETTER DIMENSION										
	M4	M5		M6		M7		M8		M9	
		in	mm	in	mm	in	mm	in	mm	in	mm
M27	1.000 in	2.618	66.5	5.315	135.0	0.750	19.1	2.500	63.5	—	—
M28	25.0 mm										
M29	1.250 in	2.618	66.5	6.299	160.0	0.750	19.1	3.130	79.5	—	—
M30	33.3 mm										
M36	30.0 mm	2.618	66.5	6.299	160.0	0.750	19.1	3.130	79.5	—	—
M37	32.0 mm										

GRM4Tx (GRM2Tx-B08)

ACCESSORY CODE	KIT NUMBER	WEIGHT ADDER	
		lb	kg
M27	64646-06	0.77	0.35
M28	64648-05	0.78	0.35
M29	64647-02	1.05	0.47
M30	64649-02	1.00	0.45
M36	65001-12	1.08	0.49
M37	62223-08	1.04	0.47

All dimensions are reference only unless specifically toleranced.

GRMxTx- M38 SPHERICAL MOUNTING BRACKET FOR SQUARE TUBE

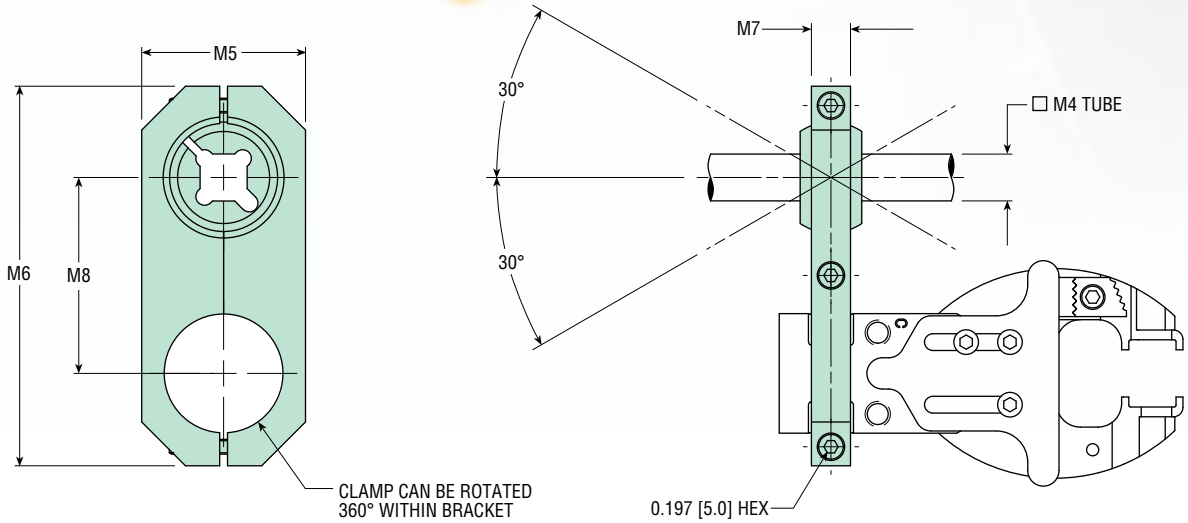

CLAMP SIZE	LETTER DIMENSION								
	M4	M5		M6		M7		M8	
		in	mm	in	mm	in	mm	in	mm
GRM1Tx-B11 GRM2Tx	19.0 mm	2.618	66.5	6.064	154.0	0.625	15.9	3.130	79.5
GRM4Tx GRM2Tx-B08	19.0 mm	2.618	66.5	6.299	160.0	0.750	19.1	3.130	79.5

CLAMP SIZE	KIT NUMBER	WEIGHT ADDER	
		lb	kg
1-B11	81269-190	1.00	0.45
2	81269-190	1.00	0.45
4, 2-B08	81270-190	1.10	0.50

All dimensions are reference only unless specifically toleranced.

GRMx A x or GRMxTx- M24 M44 REAR MOUNTING BRACKET (Spherical or Non-Spherical)

GRMx B x or GRMxTx- M43 M45 OVERSIZE REAR MOUNTING BRACKET (Spherical or Non-Spherical)

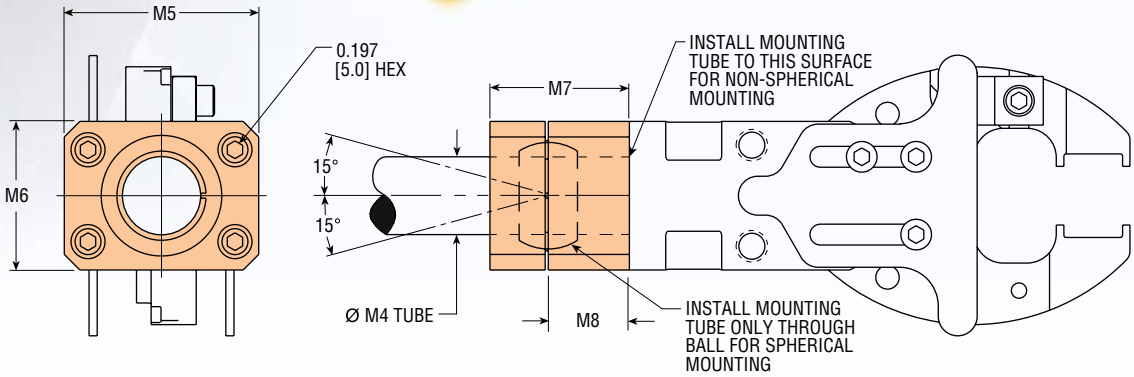

FOR REAR MOUNTING BRACKET:

LETTER DIM	MODEL NUMBER			
	GRM2		GRM4 (GRM2-B08)	
	in	mm	in	mm
M4 (A)	1.000	25.0	1.000	25.0
M4 (M24)	25.0 mm		25.0 mm	
M4 (M44)	1.000 in		1.000 in	
M5	2.500	63.5	3.000	76.2
M6	1.910	48.5	2.240	56.9
M7	1.791	45.5	1.791	45.5
M8	1.043	26.5	1.043	26.5

CLAMP SIZE	KIT NUMBER				WEIGHT ADDER	
	IMPERIAL	METRIC	M24	M44	lb	kg
2	65008-03	65008-05	65008-05	65008-03	1.00	0.45
4, 2-B08	65008-04	65008-06	65008-06	65008-04	1.68	0.76

FOR OVERSIZE REAR MOUNTING BRACKET:

LETTER DIM	MODEL NUMBER			
	GRM2		GRM4 (GRM2-B08)	
	in	mm	in	mm
M4 (B)	1.250	33.3	1.250	33.3
M4 (M43)	33.3 mm		33.3 mm	
M4 (M45)	1.250 in		1.250 in	
M5	3.000	76.2	3.000	76.2
M6	2.240	56.9	2.500	63.5
M7	2.087	53.0	2.087	53.0
M8	1.305	33.1	1.305	33.1

CLAMP SIZE	KIT NUMBER				WEIGHT ADDER	
	IMPERIAL	METRIC	M43	M45	lb	kg
2	65016-03	65016-04	65016-04	65016-03	1.67	0.76
4, 2-B08	65016-05	65016-06	65016-06	65016-05	1.71	0.78

GRMx P REAR MOUNTING PLATE

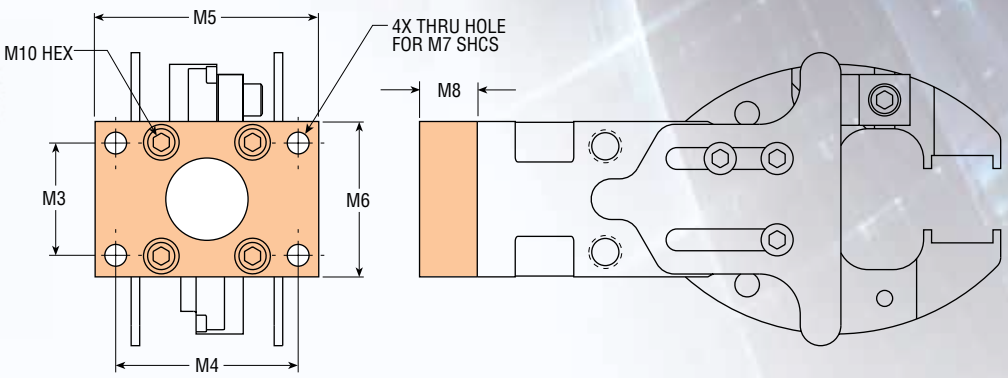

LETTER DIM	MODEL NUMBER			
	GRM2Px		GRM4Px (GRM2Px-B08)	
	in	mm	in	mm
M3	1.380	35.1	1.890	48.0
M4	2.244	57.0	2.992	76.0
M5	2.750	69.9	3.750	95.3
M6	1.910	48.5	2.500	63.5
M7	1/4	M6	5/16	M8
M8	0.710	18.0	0.846	21.5
M10	0.197	5.0	0.236	6.0

CLAMP SIZE	KIT NUMBER		WEIGHT ADDER	
	IMPERIAL	METRIC	lb	kg
2	65004-03	65004-03	0.24	0.11
4, 2-B08	65004-04	65004-04	0.56	0.25

GRMx T REAR MOUNTING THREADS (Standard on all clamps)

GRM1 T

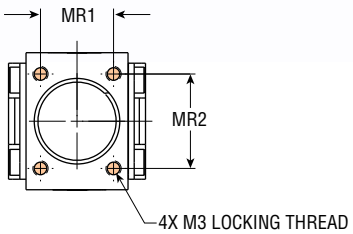

GRM2 T

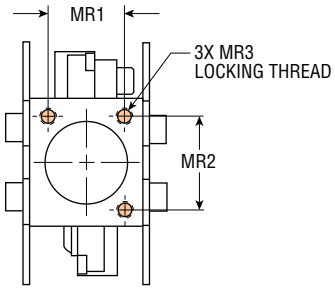

GRM4 T

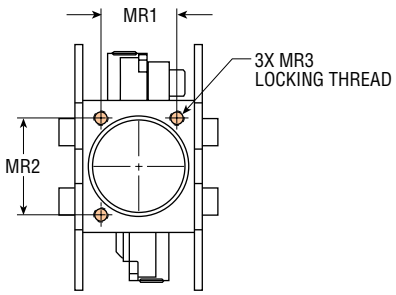

LETTER DIM	MODEL NUMBER					
	GRM1Tx		GRM2Tx		GRM4Tx (GRM2Tx-B08)	
	in	mm	in	mm	in	mm
MR1	0.945	24.0	1.122	28.5	1.496	38.0
MR2	1.220	31.0	1.398	35.5	1.693	43.0
MR3	M5 x 0.8 x 0.450 [11.4] DP		M6 x 1.0 x 0.413 [10.5] DP		M8 x 1.25 x 0.512 [13.0] DP	

All dimensions are reference only unless specifically toleranced.

GRMxTx- M03 RIGID REAR MOUNTING BRACKET

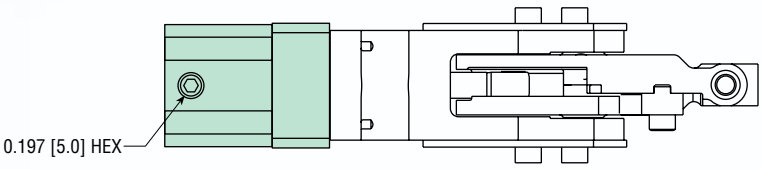

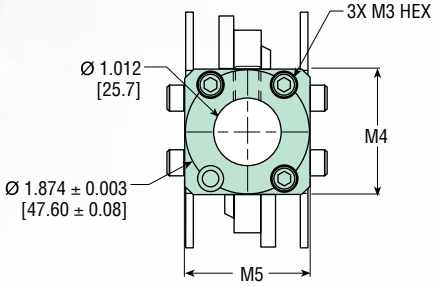

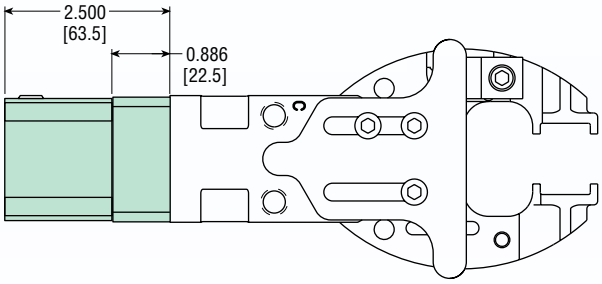

CLAMP SIZE	LETTER DIMENSION					
	M3		M4		M5	
	in	mm	in	mm	in	mm
GRM2Tx	0.197	5.0	1.910	48.5	1.910	48.5
GRM4Tx GRM2Tx-B08	0.236	6.0	2.362	60.0	2.165	55.0

CLAMP SIZE	KIT NUMBER	WEIGHT ADDER	
		lb	kg
2	65002-03	0.52	0.23
4, 2-B08	65002-04	0.72	0.32

All dimensions are reference only unless specifically toleranced.

GRMxTx- M40 1" REAR MOUNTING BRACKET (Spherical or Non-Spherical)

GRMxTx- M41 25 mm REAR MOUNTING BRACKET (Spherical or Non-Spherical)

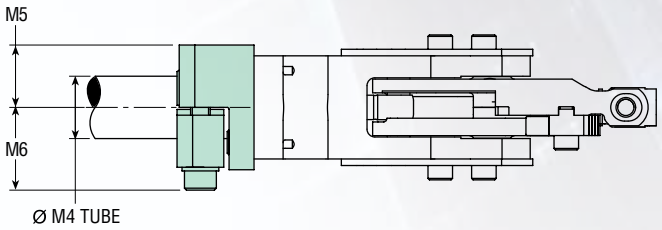

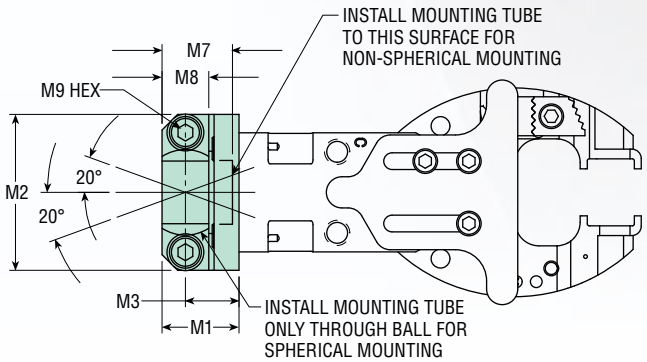

CLAMP SIZE	LETTER DIMENSION																	
	M1		M2		M3		M4		M5		M6		M7		M8		M9	
	in	mm	in	mm	in	mm	in	mm	in	mm	in	mm	in	mm	in	mm	in	mm
GRM2Tx	1.235	31.4	2.500	63.5	0.860	21.8	1.000	25.0	1.000	25.4	1.327	33.7	1.135	28.8	0.750	19.1	0.236	6.0
GRM4Tx GRM2Tx-B08	1.335	33.9	2.500	63.5	0.960	24.4	1.000	25.0	1.120	28.4	1.327	33.7	1.135	28.8	0.750	19.1	0.236	6.0

GRM2Tx

ACCESSORY CODE	KIT NUMBER	WEIGHT ADDER	
		lb	kg
M40	71201-04	0.60	0.27
M41	71201-05	0.61	0.27

GRM4Tx (GRM2Tx-B08)

ACCESSORY CODE	KIT NUMBER	WEIGHT ADDER	
		lb	kg
M40	71201-06	0.72	0.33
M41	71201-07	0.72	0.33

All dimensions are reference only unless specifically toleranced.

Step 4 - Jaw Styles & Openings

The Series GRM Clamp has 13 standard jaw styles and numerous jaw openings available to fit your application requirements. Use the following questions and graphical representations in this section to help in your selection process. Many of the jaw styles require the use of bolt-on tooling (tips). Refer to the tip section before making your final jaw style selection. If you are unable to locate a jaw style that suits your application needs, contact your local distributor or a member of PHD for assistance.

1. What is the primary function of the clamp?

a. Blank loading or sheet separation – C, D, H, J, L, or M

b. Material transfer – All jaw styles apply

c. None of the above – Consult your local distributor or PHD Customer Service for assistance.

2. Do you require tips to be mounted to the jaw(s)?

a. Tip on one jaw – C, D, H, J, L, or M

b. Tips on two jaws – S, F, G, K, or R

c. No tips required – N or P

3. Does your application have space restrictions around the point of grip?

a. Yes – S, C, F, G, H, K, L, N, or R

b. No – All jaw styles apply

4. Does your application require the axis of the clamp to be parallel or perpendicular to the material being gripped [1]?

a. Parallel – S, C, D, G, H, J, L, M, N, P, or R

b. Perpendicular – F or K

5. Is the point of grip flat or does it have shape [2] [3]?

a. Flat – All jaw styles

b. Shaped (curved) – S, F, G, K, or R

c. Shaped (angled) – All jaw styles

d. Shaped (irregular) – S, F, G, K, or R

6. Is the point of grip beyond a bend or fold in the material?

a. Yes – S, C, D, F, G, H, J, L, or M

b. No – Go to question 5

NOTES:

1) The axis of the clamp is defined by the direction of piston motion.

2) Refer to the tip section for standard and accessory tips that are suited for specific material shapes, sizes, and configurations.

3) Spherical mounting brackets allow the clamp to pivot, swivel, and rotate, thus ensuring precise alignment at the point of grip.

13 standard jaw styles, numerous jaw openings, and literally hundreds of nonstandard jaws make the Series GRM Clamp the most modular clamp in the world. Here are just a few of the many nonstandard jaw applications:

A	Special jaw that receives a 1.000" [25.4 mm] tube allows for vacuum cups and related tooling.
B	Removal of one jaw turns a GRM Clamp into a locking hold down clamp.
C	Elongated jaws for applications where the point of grip is further inward from the edge of the part.
D	Aluminum jaws can reduce the weight of the clamp by up to 0.54 lb [0.25 kg].
E	Special needlenose jaws that are only 0.188 [4.8 mm] wide and come equipped with integral teeth used to grip material in extremely narrow spaces.
F	Clamp with elongated M style jaws to replace a competitive product.

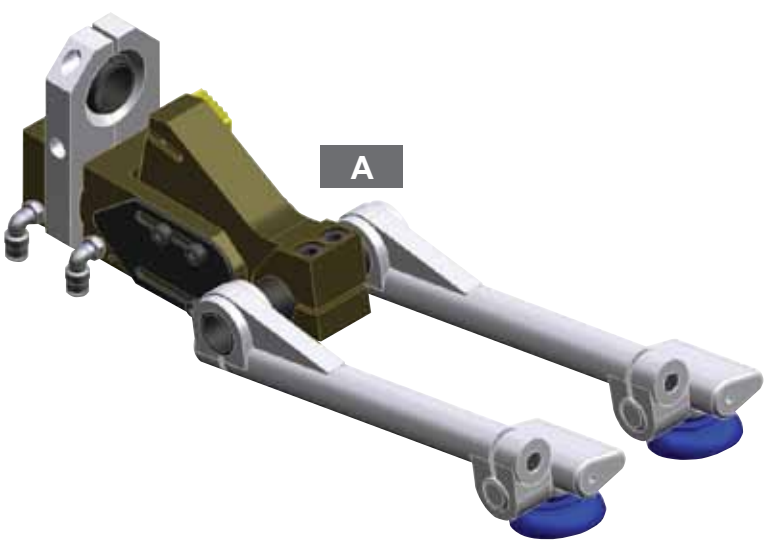

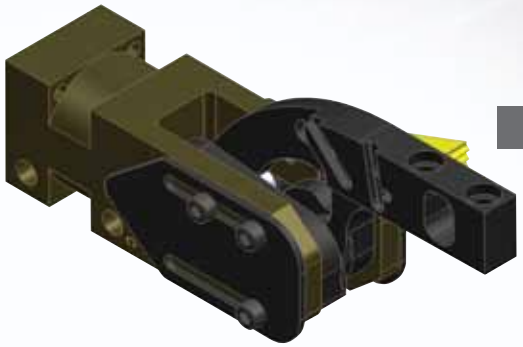

B

D

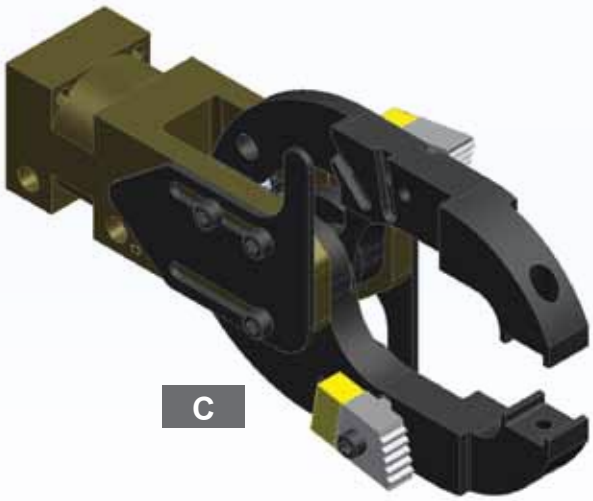

C

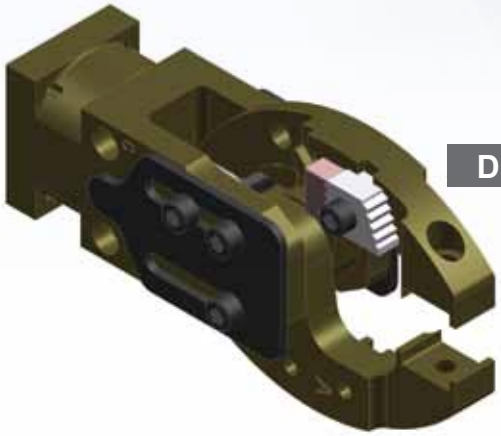

D

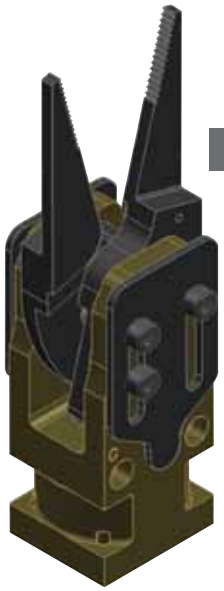

E

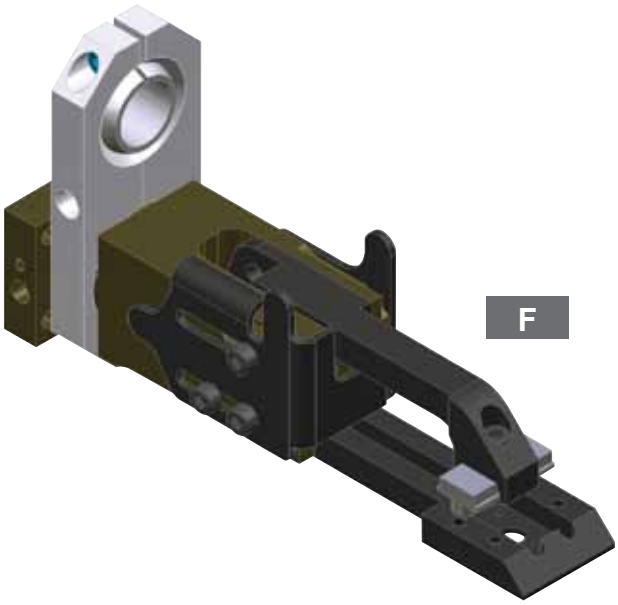

F

"S" jaw style

Jaw Design Benefits

- Jaws lock in closed position.
- Accepts standard and custom tooling.
- Sizes 2 and 4's adjustable external rotation stop allows for multiple jaw openings in one clamp.
- Sizes 2 and 4's jaws are designed with wide and deep jaw throats to accommodate non-flat applications.
- Size 1 has the same grip force as size 2.
- Many jaw rotations available for wide variety of applications.

GRM1xS

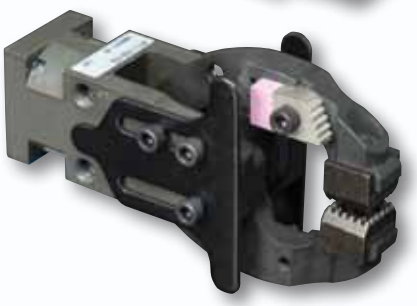

GRM2xS

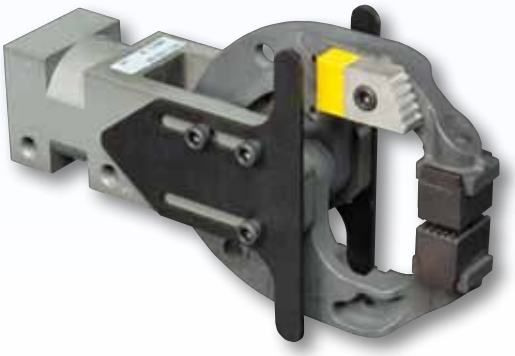

GRM4xS

Available Jaw Rotations

= Available Combination

= Not Available

For other configurations, consult your local distributor or PHD, Inc.

GRM1xS						
JAW STYLE OPTION S		JAW A				
		0°	5°	14°	30°	50°
JAW B	0°					
	5°					
	14°					
	30°					
	50°					

GRM2xS									
JAW STYLE OPTION S		JAW A							
		0°	11°	14°	15°	22°	30°	45°	75°
JAW B	0°								
	11°								
	14°								
	15°								
	22°								
	30°								
	45°								
	75°								

GRM4xS					
JAW STYLE OPTION S		JAW A			
		0°	22°	45°	75°
JAW B	0°				
	22°				
	45°				
	75°				

NOTE:

1) The 0° jaw rotates open slightly during the clamp cycle.

The 0° jaw returns to 0° position as the opposing jaw reaches the fully open or fully closed positions.

Dimensions

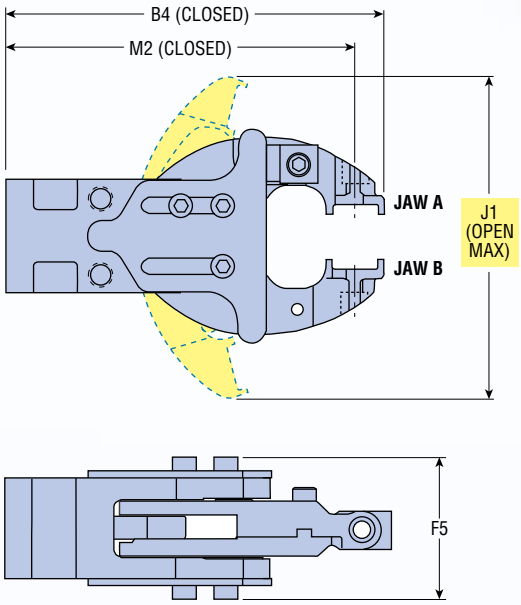

LETTER DIMENSIONS	MODEL NUMBER					
	GRM1xS		GRM2xS		GRM4xS	
	in	mm	in	mm	in	mm
B4 (CLOSED)	4.724	120.0	6.453	163.9	8.799	223.5
F5	1.771	45.0	2.336	59.3	2.662	67.6
M2 (CLOSED)	4.252	108.0	5.965	151.5	8.307	211.0

LETTER DIMENSIONS	ROTATIONS	MODEL NUMBER GRM1xS	
		in	mm
J1 (OPEN)	14° x 14°	2.318	58.9
	14° x 30° 30° x 14°	2.566	65.2
	14° x 50° 50° x 14°	2.744	69.7
	30° x 30°	2.814	71.5
	30° x 50° 50° x 30°	2.992	76.0
	50° x 50°	3.170	80.5

LETTER DIMENSIONS	ROTATIONS	MODEL NUMBER			
		GRM2xS		GRM4xS	
		in	mm	in	mm
J1 (OPEN)	22° x 22°	3.972	100.9	5.528	140.4
	22° x 45° 45° x 22°	4.403	111.8	—	
	30° x 30°	4.238	107.6	—	
	30° x 75° 75° x 30°	4.784	121.5	—	
	45° x 45°	4.834	122.8	6.159	156.4
	75° x 75°	5.330	135.4	6.894	175.1

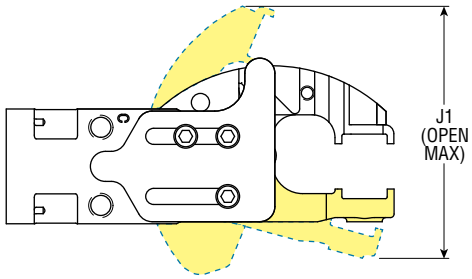

LETTER DIMENSIONS	ROTATIONS	MODEL NUMBER GRM1xS	
		in	mm
J1 (OPEN)	00° x 05° 05° x 00°	1.881	47.8
	00° x 14° 14° x 00°	2.047	52.0
	00° x 30° 30° x 00°	2.295	58.3
	00° x 50° 50° x 00°	2.437	61.9
	05° x 05°	1.986	50.4
	05° x 14° 14° x 05°	2.152	54.7
	05° x 30° 30° x 05°	2.400	61.0
	05° x 50° 50° x 05°	2.578	65.5

LETTER DIMENSIONS	ROTATIONS	MODEL NUMBER			
		GRM2xS		GRM4xS	
		in	mm	in	mm
J1 (OPEN)	00° x 22° 22° x 00°	2.908	73.9	3.945	100.2
	00° x 30° 30° x 00°	3.041	77.2	—	
	00° x 45° 45° x 00°	3.339	84.8	4.257	108.1
	00° x 75° 75° x 00°	3.587	91.1	4.660	118.4
	11° x 11°	3.179	80.7	—	
	14° x 30° 30° x 14°	3.604	91.5	—	
	15° x 30° 30° x 15°	3.641	92.5	—	
	15° x 75° 75° x 15°	4.187	106.3	—	

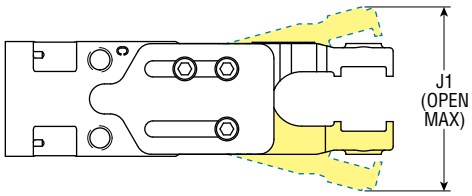

LETTER DIMENSIONS	ROTATIONS	MODEL NUMBER					
		GRM1xS		GRM2xS		GRM4xS	
		in	mm	in	mm	in	mm
J1 (OPEN)	00° x 15° 15° x 00°	—		2.444	62.1	—	
	15° x 15°	—		3.044	77.3	—	

All dimensions are reference only unless specifically toleranced.

“C” jaw style

“D” jaw style

Jaw Design Benefits

- Jaws lock in closed position.
- Upper jaw accepts standard and custom tooling.
- Lower jaw is a compact design ideal for blank loading and sheet separation applications.
- Adjustable external rotation stop allows for multiple jaw openings in one clamp.
- Many jaw rotations available for wide variety of applications.

GRM2xC
Single Chisel

GRM2xD
Double Chisel

Available Jaw Rotations

= Available Combination

= Not Available

For other configurations, consult your local distributor or PHD, Inc.

GRM2xC, GRM2xD									
JAW STYLE OPTIONS C & D		JAW A							
		0°	11°	14°	15°	22°	30°	45°	75°
JAW B	0°								
	11°								
	14°								
	15°								
	22°								
	30°								
	45°								
	75°								

NOTE:

1) The 0° jaw rotates open slightly during the clamp cycle.

The 0° jaw returns to 0° position as the opposing jaw reaches the fully open or fully closed positions.

Dimensions

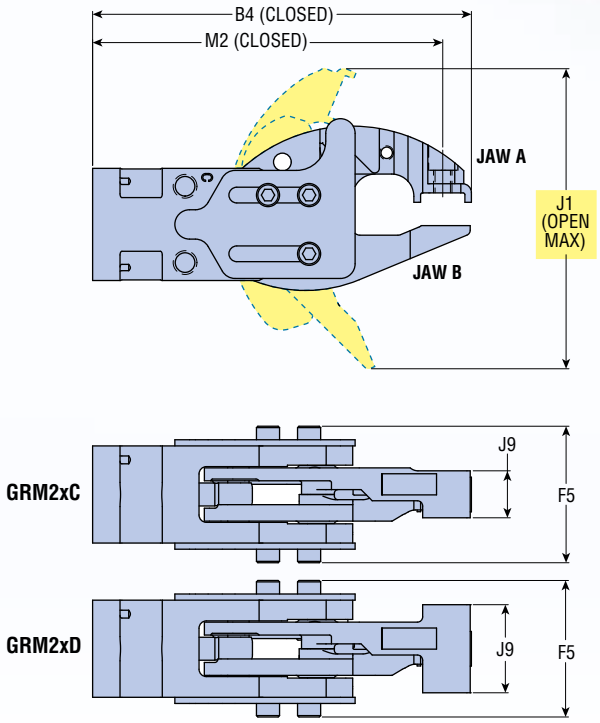

LETTER DIMENSIONS	MODEL NUMBER			
	GRM2xC		GRM2xD	
	in	mm	in	mm
B4 (CLOSED)	6.453	163.9	6.453	163.9
F5	2.336	59.3	2.336	59.3
J9	0.800	20.3	1.500	38.1
M2 (CLOSED)	5.965	151.5	5.965	151.5

LETTER DIMENSIONS	ROTATIONS	MODEL NUMBER GRM2xC, GRM2xD	
		in	mm
J1 (OPEN)	11° x 11°	2.857	72.6
	30° x 14°	3.198	81.2
	30° x 15°	3.193	81.1
	75° x 15°	3.755	95.4
	22° x 22°	3.138	79.7
	22° x 45°	3.923	99.6
	30° x 75°	4.559	115.8
	45° x 45°	4.368	110.9
	75° x 75°	5.121	130.1

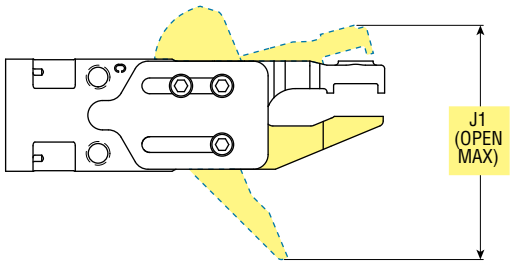

LETTER DIMENSIONS	ROTATIONS	MODEL NUMBER GRM2xC, GRM2xD	
		in	mm
J1 (OPEN)	00° x 15°	2.018	51.3
	00° x 75°	3.384	86.0
	15° x 00°	2.452	62.3
	15° x 15°	2.622	66.6
	15° x 75°	3.988	101.3

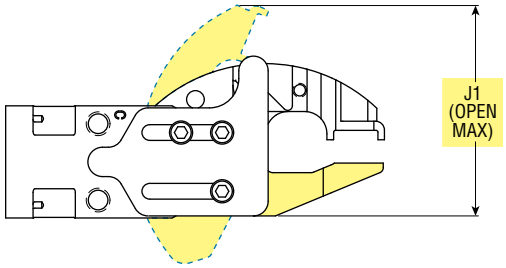

LETTER DIMENSIONS	ROTATIONS	MODEL NUMBER GRM2xC, GRM2xD	
		in	mm
J1 (OPEN)	22° x 00°	2.908	73.9
	30° x 00°	3.038	77.2
	45° x 00°	3.341	84.9
	75° x 00°	3.584	91.0

All dimensions are reference only unless specifically toleranced.

“F” jaw style

GRM1xF

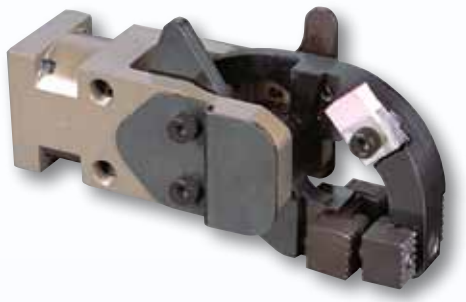

GRM2xF

GRM4xF

Jaw Design Benefits

- Jaws lock in closed position.
- Accepts standard and custom tooling.
- Adjustable external rotation stop allows for multiple jaw openings in one clamp.
- Ideal to grip on bends or flanges.

Available Jaw Rotations

= Available Combination

= Not Available

For other configurations, consult your local distributor or PHD, Inc.

GRM1xF			
JAW STYLE OPTION F		JAW A	
		30°	60°
JAW B	0°		

GRM2xF			
JAW STYLE OPTION F		JAW A	
		50°	85°
JAW B	0°		
	22°		

GRM4xF			
JAW STYLE OPTION F		JAW A	
		50°	85°
JAW B	0°		

NOTE:

1) The 0° jaw rotates open slightly during the clamp cycle.

The 0° jaw returns to 0° position as the opposing jaw reaches the fully open or fully closed positions.

Dimensions

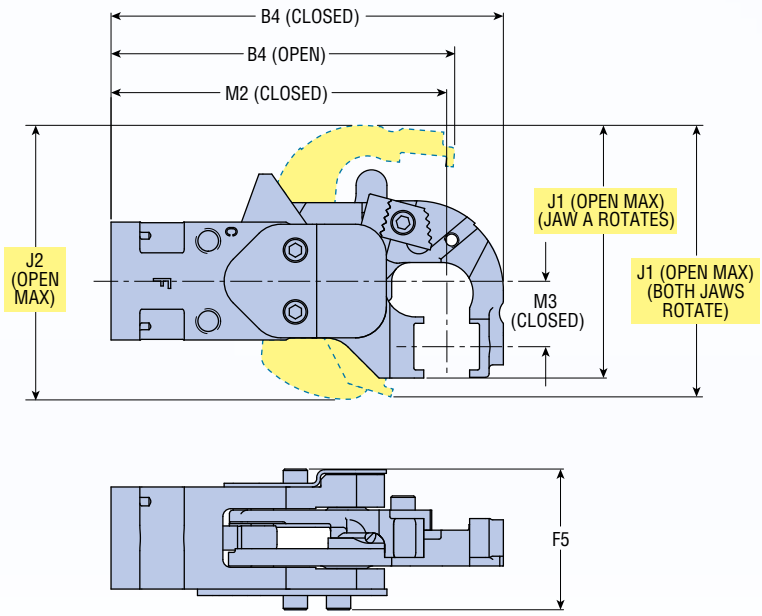

LETTER DIMENSIONS	ROTATIONS	MODEL NUMBER GRM1xF	
		in	mm
B4 (OPEN)	30° x 00°	5.692	144.6
	60° x 00°	5.570	141.5
B4 (CLOSED)	ALL	5.217	132.5
F5		2.106	53.5
M2 (CLOSED)		4.331	110.0
M3 (CLOSED)		1.181	30.0

LETTER DIMENSIONS	ROTATIONS	MODEL NUMBER GRM2xF		GRM4xF	
		in	mm	in	mm
B4 (OPEN)	50° x 00°	6.492	164.9	8.835	224.4
	85° x 00°	5.569	141.5	7.435	188.8
	50° x 22°	6.492	164.9	—	—
B4 (CLOSED)	ALL	6.358	161.5	8.692	220.8
F5		2.291	58.2	2.941	74.7
M2 (CLOSED)		5.440	138.2	1.181	30.0
M3 (CLOSED)		1.063	27.0	7.520	191.0

LETTER DIMENSIONS	ROTATIONS	MODEL NUMBER GRM1xF	
		in	mm
J1 (OPEN)	30° x 00°	2.811	71.4
	60° x 00°	3.211	81.6

LETTER DIMENSIONS	ROTATIONS	MODEL NUMBER GRM2xF		GRM4xF	
		in	mm	in	mm
J1 (OPEN)	50° x 00°	3.754	95.4	4.761	120.9
	85° x 00°	4.095	104.0	4.910	124.7
	50° x 22°	4.119	104.6	—	—
J2 (OPEN)	50° x 00°	3.830	97.3	5.267	133.8
	85° x 00°	4.438	112.7	5.885	149.5

All dimensions are reference only unless specifically toleranced.

“G” jaw style

Jaw Design Benefits

- Jaws lock in closed position.
- Accepts custom tooling.
- Adjustable external rotation stop allows for multiple jaw openings in one clamp.
- Designed with large space between jaws to accommodate non-flat and large material applications.

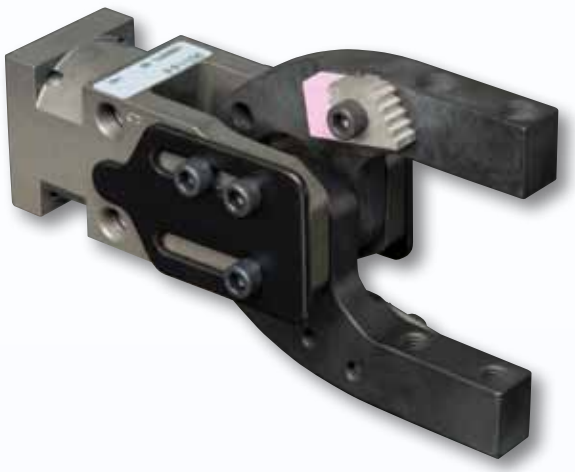

GRM2xG

Available Jaw Rotations

= Available Combination

= Not Available

For other configurations, consult your local distributor or PHD, Inc.

GRM2xG						
JAW STYLE OPTION G		JAW A				
		0°	11°	18°	22°	40°
JAW B	0°					
	11°					
	18°					
	22°					
	40°					

GRM4xG					
JAW STYLE OPTION G		JAW A			
		0°	22°	40°	70°
JAW B	0°				
	22°				
	40°				
	70°				

NOTE:

1) The 0° jaw rotates open slightly during the clamp cycle.

The 0° jaw returns to 0° position as the opposing jaw reaches the fully open or fully closed positions.

Dimensions

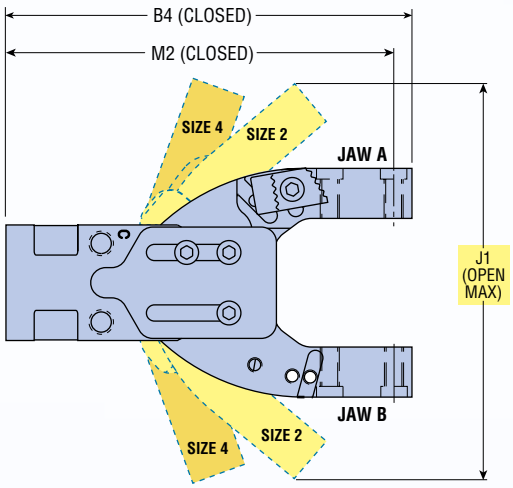

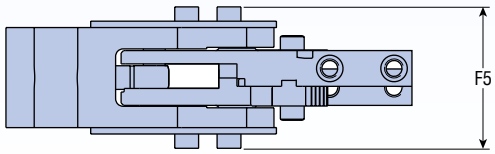

LETTER DIMENSIONS	MODEL NUMBER			
	GRM2xG		GRM4xG	
	in	mm	in	mm
B4 (CLOSED)	6.713	170.5	8.996	228.5
F5	2.336	59.3	2.662	67.6
M2 (CLOSED)	6.417	163.0	8.642	219.5

LETTER DIMENSIONS	ROTATIONS		MODEL NUMBER			
			GRM2xG		GRM4xG	
			in	mm	in	mm
J1 (OPEN)	11° x 11°		4.812	122.2	—	—
	22° x 22°		5.704	144.9	7.070	179.6
	40° x 40°		6.616	168.0	8.135	206.6
	70° x 70°		—	—	8.194	208.1
	18° x 00°	00° x 18°	4.585	116.5	—	—
	40° x 00°	00° x 40°	5.203	132.2	6.430	163.3
	70° x 00°	00° x 70°	—	—	6.470	164.3

“H” jaw style

“J” jaw style

Jaw Design Benefits

- Jaws lock in closed position.
- Upper jaw accepts standard and custom tooling.
- Lower jaw is a compact design ideal for blank loading and sheet separation applications.
- Adjustable external rotation stop allows for multiple jaw openings in one clamp.

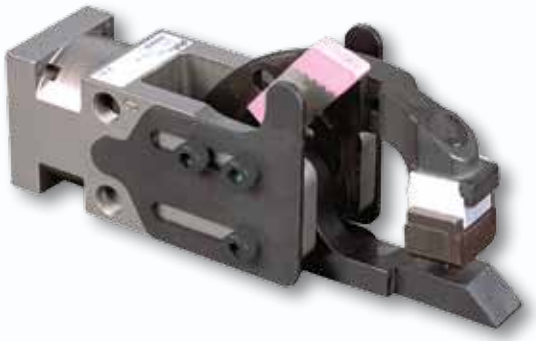

GRM2xH
Single Shovel

GRM2xJ
Double Shovel

Available Jaw Rotations

= Available Combination

= Not Available

For other configurations, consult your local distributor or PHD, Inc.

GRM2xH, GRM2xJ						
JAW STYLE OPTIONS H & J		JAW A				
		15°	22°	30°	45°	75°
JAW B	0°					

GRM4xH, GRM4xJ				
JAW STYLE OPTIONS H & J		JAW A		
		22°	45°	75°
JAW B	0°			

NOTE:

1) The 0° jaw rotates open slightly during the clamp cycle.

The 0° jaw returns to 0° position as the opposing jaw reaches the fully open or fully closed positions.

Dimensions

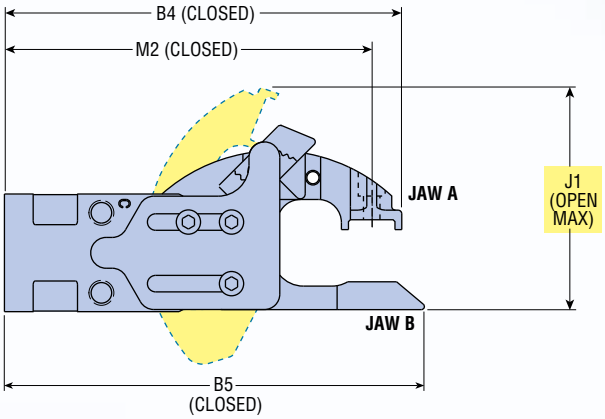

LETTER DIMENSIONS	MODEL NUMBER							
	GRM2xH		GRM2xJ		GRM4xH		GRM4xJ	
	in	mm	in	mm	in	mm	in	mm
B4 (CLOSED)	6.453	163.9	6.453	163.9	8.799	223.5	8.799	223.5
B5 (CLOSED)	6.820	173.2	6.820	173.2	9.429	239.5	9.429	239.5
F5	2.336	59.3	2.336	59.3	2.662	67.6	2.662	67.6
J9	0.630	16.0	1.530	38.9	0.785	19.9	1.850	47.0
M2 (CLOSED)	5.965	151.5	5.965	151.5	8.307	211.0	8.307	211.0

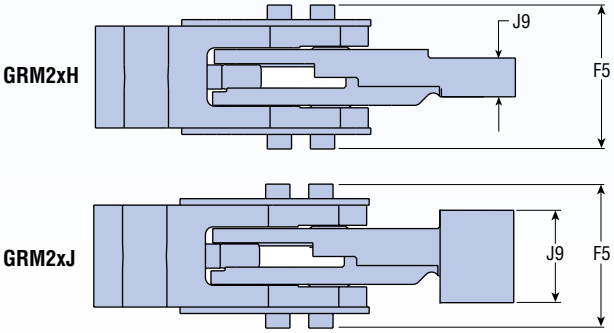

LETTER DIMENSIONS	ROTATIONS	MODEL NUMBER			
		GRM2xH, GRM2xJ		GRM4xH, GRM4xJ	
		in	mm	in	mm
J1 (OPEN)	22° x 00°	2.911	73.9	3.977	101.0
	30° x 00°	3.044	77.3	—	—
	45° x 00°	3.342	84.9	4.355	110.6
	75° x 00°	3.590	91.2	4.617	117.3

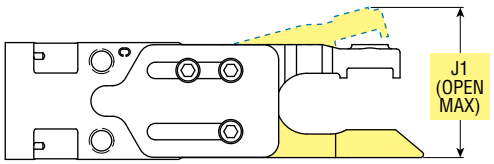

LETTER DIMENSIONS	ROTATIONS	MODEL NUMBER			
		GRM2xH, GRM2xJ		GRM4xH, GRM4xJ	
		in	mm	in	mm
J1 (OPEN)	15° x 00°	2.447	62.2	—	—

All dimensions are reference only unless specifically toleranced.

“K” jaw style

Jaw Design Benefits

- Jaws lock in closed position.
- Accepts standard and custom tooling.
- Adjustable external rotation stop allows for multiple jaw openings in one clamp.
- Short overall length to save space between rails.

GRM2xK

Available Jaw Rotations

= Available Combination

= Not Available

For other configurations, consult your local distributor or PHD, Inc.

GRM2xK			
JAW STYLE OPTION K		JAW A	
		25°	50°
JAW B	0°		
	20°		
	40°		

NOTE:

1) The 0° jaw rotates open slightly during the clamp cycle.

The 0° jaw returns to 0° position as the opposing jaw reaches the fully open or fully closed positions.

Dimensions

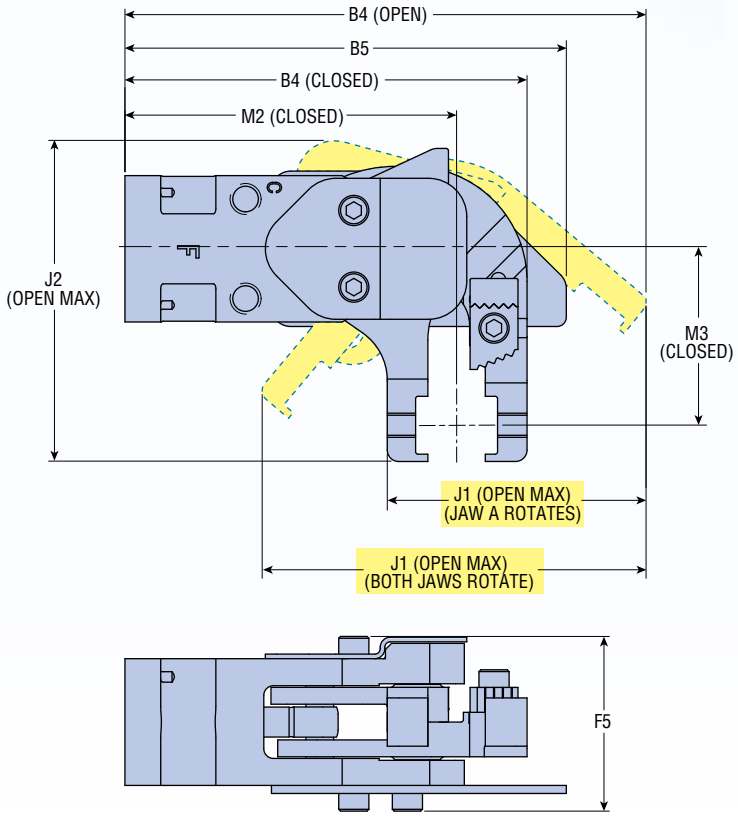

LETTER DIMENSIONS	ROTATIONS	MODEL NUMBER GRM2xK	
		in	mm
B4 (OPEN)	50° x 40°	6.804	172.8
	25° x 20°	6.240	158.5
	50° x 00°	6.804	172.8
B4 (CLOSED)	ALL	5.250	133.4
B5		5.763	146.4
F5		2.291	58.2
M2 (CLOSED)		4.330	110.0
M3 (CLOSED)		2.303	58.5

LETTER DIMENSIONS	ROTATIONS	MODEL NUMBER GRM2xK	
		in	mm
J1 (OPEN)	50° x 40°	5.012	127.3
	25° x 20°	3.714	94.3
	50° x 00°	3.385	86.0
J2 (OPEN)	50° x 40°	4.184	106.3

All dimensions are reference only unless specifically toleranced.

“L” jaw style

“M” jaw style

Jaw Design Benefits

- Jaws lock in closed position.
- Adjustable internal rotation stop allows for multiple jaw openings in one clamp.
- Completely fixed lower jaw. Upper jaw does not swing through the bottom of the clamp.
- Ideal for limited spaces.

GRM2xL
Single Flat Shovel

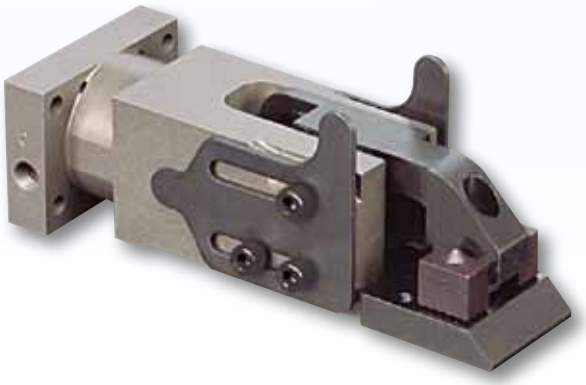

GRM2xM
Double Flat Shovel

Available Jaw Rotations

= Available Combination

= Not Available

For other configurations, consult your local distributor or PHD, Inc.

GRM2xL, GRM2xM				
JAW STYLE OPTIONS L & M		JAW A		
		22°	45°	85°
JAW B	0°			

Dimensions

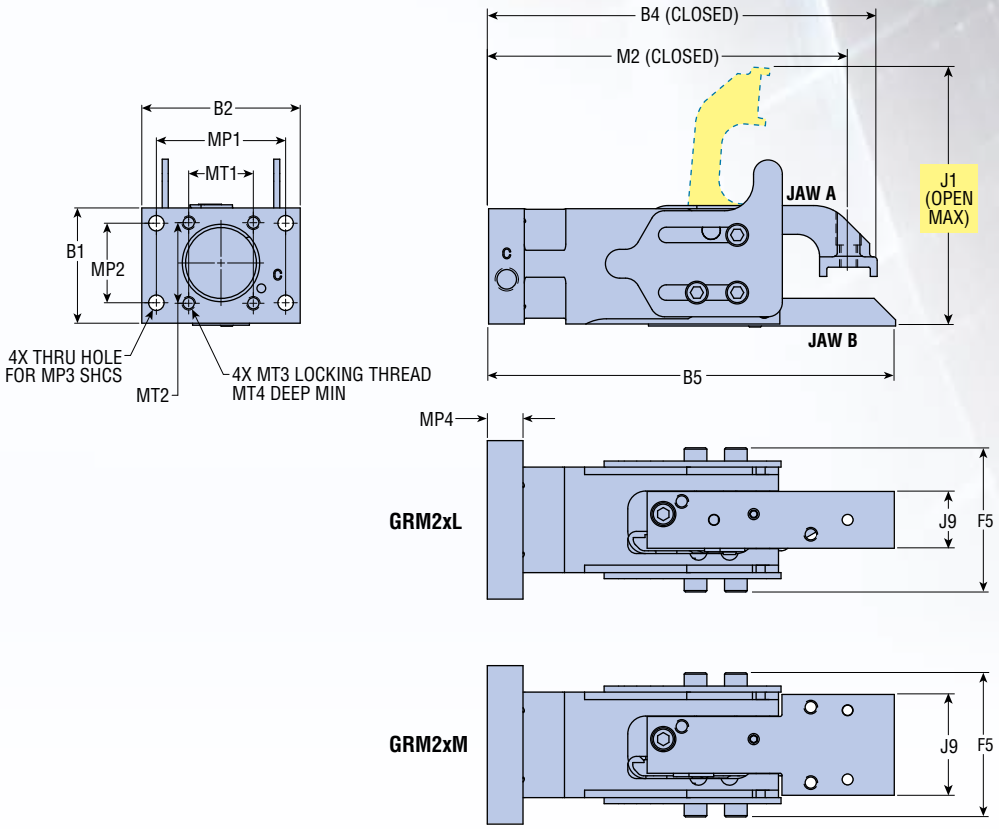

LETTER DIMENSIONS	MODEL NUMBER			
	GRM2xL		GRM2xM	
	in	mm	in	mm
B1	2.000	50.8	2.000	50.8
B2	2.750	69.9	2.750	69.9
B4 (CLOSED)	6.745	171.3	6.745	171.3
B5	7.065	179.5	7.065	179.5
F5	2.513	63.8	2.513	63.8
J9	0.986	25.0	1.750	44.5
M2 (CLOSED)	6.249	158.7	6.249	158.7
MP1	2.244	57.0	2.244	57.0
MP2	1.380	35.1	1.380	35.1
MP3	1/4	M6	1/4	M6
MP4	0.620	15.7	0.620	15.7
MT1	1.122	28.5	1.122	28.5
MT2	1.398	35.5	1.398	35.5
MT3	M6 x 1.0		M6 x 1.0	
MT4	0.420	10.7	0.420	10.7

LETTER DIMENSIONS	ROTATIONS	MODEL NUMBER	
		GRM2xL, GRM2xM	
		in	mm
J1 (OPEN)	22° x 00°	2.795	71.0
	45° x 00°	3.442	87.4
	85° x 00°	4.498	114.2

All dimensions are reference only unless specifically toleranced.

“N” jaw style

“P” jaw style

Jaw Design Benefits

- Jaws lock in closed position over a wide panel thickness range (0.0 to 4.0 mm).
- Compact jaw design ideal for limited spaces and blank loading applications.
- Jaws with integral diamond points eliminate the need for tip options.

GRM2xN
Needlenose

GRM2xP
Hammerhead

Available Jaw Rotations

= Available Combination

= Not Available

For other configurations, consult your local distributor or PHD, Inc.

GRM2xN, GRM2xP						
JAW STYLE OPTIONS N & P		JAW A				
		0°	12°	22°	45°	75°
JAW B	0°					
	12°					
	22°					
	45°					
	75°					

NOTE:

1) The 0° jaw rotates open slightly during the clamp cycle.

The 0° jaw returns to 0° position as the opposing jaw reaches the fully open or fully closed positions.

Dimensions

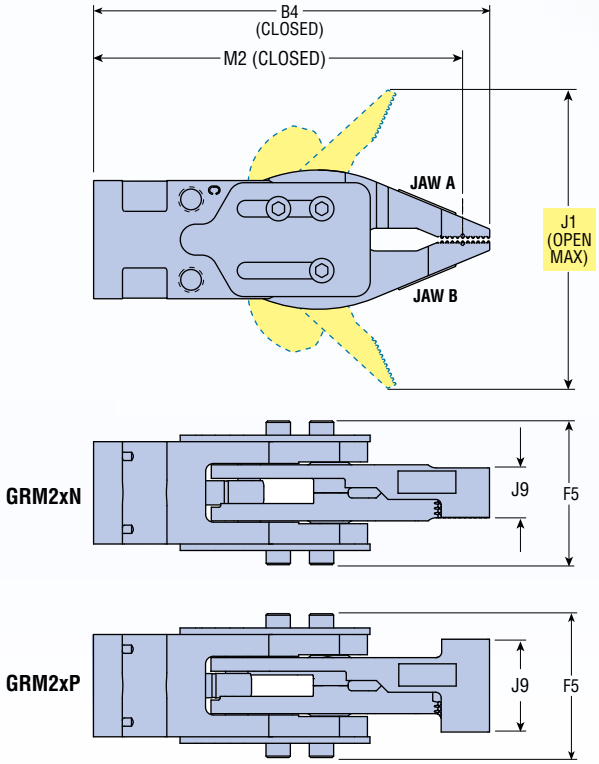

LETTER DIMENSIONS	MODEL NUMBER			
	GRM2xN		GRM2xP	
	in	mm	in	mm
B4 (CLOSED)	6.403	162.6	6.403	162.6
F5	2.336	59.3	2.336	59.3
J9	0.800	20.3	1.500	38.1
M2 (CLOSED)	5.965	151.5	5.965	151.5

LETTER DIMENSIONS	ROTATIONS		MODEL NUMBER GRM2xN, GRM2xP	
			in	mm
J1 (OPEN)	12° x 12°		2.225	56.5
	22° x 22°		2.286	58.1
	45° x 45°		3.894	98.9
	75° x 75°		4.869	123.7
	12° x 45°	45° x 12°	3.057	77.6
	22° x 75°	75° x 22°	3.578	90.9

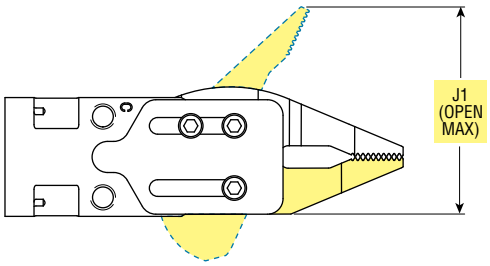

LETTER DIMENSIONS	ROTATIONS		MODEL NUMBER GRM2xN, GRM2xP	
			in	mm
J1 (OPEN)	00° x 12°	12° x 00°	2.032	51.6
	00° x 22°	22° x 00°	2.061	52.3
	00° x 45°	45° x 00°	2.568	65.2
	00° x 75°	75° x 00°	3.356	85.2

All dimensions are reference only unless specifically toleranced.

“R” jaw style

Jaw Design Benefits

- Jaws lock in closed position.
- Accepts standard and custom tooling.
- Adjustable external rotation stop allows for multiple jaw openings in one clamp.
- Ideal for limited space environments.
- Higher grip force in smaller package.

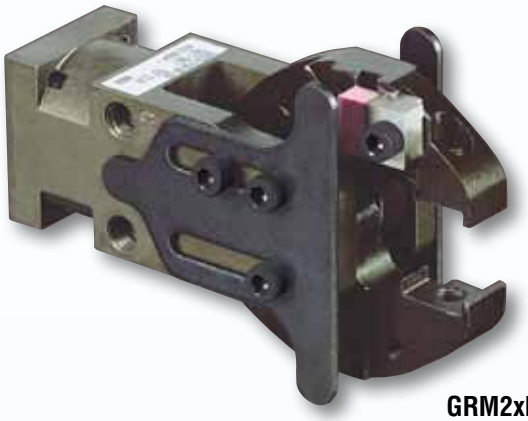

GRM2xR

Available Jaw Rotations

= Available Combination

= Not Available

For other configurations, consult your local distributor or PHD, Inc.

GRM2xR						
JAW STYLE OPTION R		JAW A				
		0°	22°	35°	45°	60°
JAW B	0°					
	22°					
	35°					
	45°					
	60°					

NOTE:

1) The 0° jaw rotates open slightly during the clamp cycle.

The 0° jaw returns to 0° position as the opposing jaw reaches the fully open or fully closed positions.

Dimensions

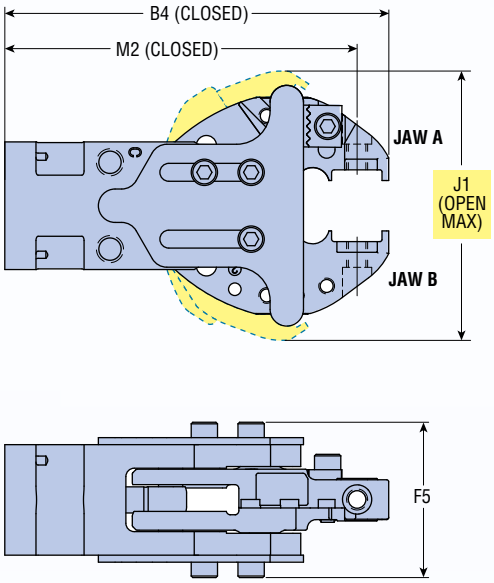

LETTER DIMENSIONS	MODEL NUMBER GRM2xR	
	in	mm
B4 (CLOSED)	5.748	146.0
F5	2.336	59.3
M2 (CLOSED)	5.275	134.0

LETTER DIMENSIONS	ROTATIONS	MODEL NUMBER GRM2xR	
		in	mm
J1 (OPEN)	22° x 22°	3.573	90.8
	35° x 35°	3.667	93.1
	45° x 45°	3.848	97.7
	60° x 60°	4.060	103.1

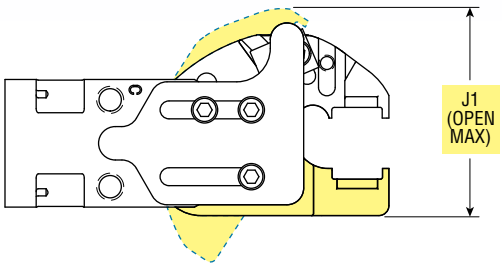

LETTER DIMENSIONS	ROTATIONS		MODEL NUMBER GRM2xR	
			in	mm
J1 (OPEN)	22° x 00°	00° x 22°	2.869	72.9
	45° x 00°	00° x 45°	3.003	76.3
	60° x 00°	00° x 60°	3.112	79.0

Step 5 - Design Number

The Series GRM Clamp is available in two design configurations: 2 or 6. Design 2 designation provides a clamp equipped with imperial port threads (1/8-27 NPT). Design 6 designation provides a clamp equipped with metric port threads (1/8-28 BSPP). All other features are identical between the two designs. Use the following questions in this section to help in your selection process. If you are unable to identify the design number that suits your application needs, contact your local distributor or a member of PHD for assistance.

1. What is the O.D. size of the air line you will be connecting to the clamp?

a. Ø 1/4" – Design 2

b. Ø 6mm – Design 6

c. Ø 8mm – Design 6

2. What is the port fitting thread size you will be connecting to the clamp?

a. 1/8-27 NPT – Design 2

b. 1/8-28 BSPP – Design 6

3. Do you require a clamp with imperial port threads and imperial mounting bracketry or a clamp with metric port threads and metric mounting bracketry (1) (2)?

a. Yes – Design 2 for imperial port threads and imperial mounting bracketry (when specified) or Design 6 for metric port threads and metric mounting bracketry (when specified)

b. No – See question 4

4. Do you require a clamp with metric port threads and imperial mounting bracketry (1) (2)?

a. Yes – Design 6 with one of the following mounting options: P, T, M03, M25, M27, M29, M39, M40, M44-M47

b. No – See question 5

5. Do you require a clamp with imperial port threads and metric mounting bracketry (1) (2)?

a. Yes – Design 2 with one of the following mounting options: P, T, M01, M07, M21-M24, M28, M30, M36-M38, or M41-M43

b. No – See question 3

NOTES:

1) Rear mounting plate (P option) will accommodate metric and imperial fasteners. See mounting bracket dimensions page.

2) Rear mounting threads (T option) come standard on all Series GRM Clamps and are metric only. See mounting bracket dimensions page.

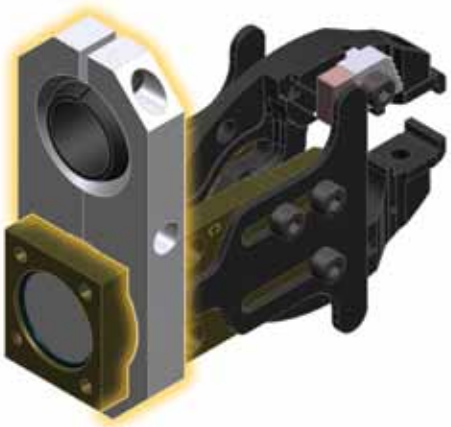

Uniform construction with the added flexibility at the customer interface (air supply and mounting) makes the Series GRM Clamps extremely user friendly. Here are examples of how we accomplish this:

A A design 2 clamp (imperial ports) with a 25.0 mm non-spherical mounting bracket (M22 mounting option) allows for imperial air lines and metric mounting.

B A design 2 clamp (Imperial ports) with a 19.0 mm spherical mounting bracket for square tubing (M38 mounting option) provides the customer a direct drop-in to their existing system without the added expense of converting their plumbing and/or mounting hardware to fit the clamp.

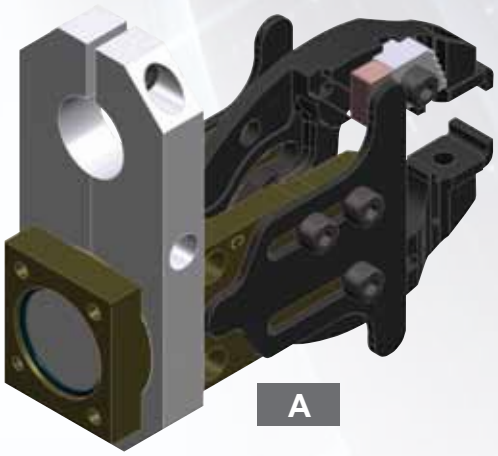

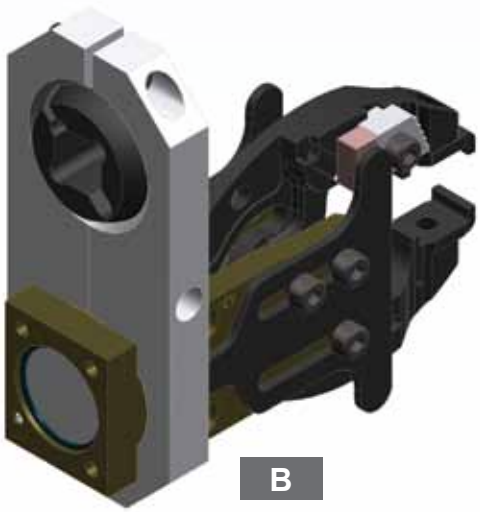

Step 6 - Tips

PHD has a wide variety of standard and accessory tooling (tips) available for the Series GRM Clamp. Selecting the right tips for your application is the most important step in specifying a GRM Clamp, because this is the point where the clamp makes contact with the part. All Series GRM Clamps tips are non-adjustable, meaning they are designed for a specific material thickness, material shape, and application function. It's imperative that the tips selected do not prohibit the jaws from closing completely, thus negating the clamp's peak grip force and locking function, and proper contact with the part. Tips also perform differently for different unit sizes and jaw styles. Be sure to reference the correct tip selection charts for the unit size and jaw style desired. Use the following questions and information provided in this section to help in your selection process. If you are unable to locate tips that suit your application needs or unsure about your selection, contact your local distributor or a member of PHD for assistance.

1) What is the material thickness at the point of grip?

a. Refer to the tip selection charts for the unit size and jaw style desired.

2) Is the usable space (width) at the point of grip ≤ 1.102 [28.0 mm] for size 1 and 2 units or ≤ 1.257 [31.9 mm] for size 4 units [(1)]?

a. Yes – Consult your local distributor or PHD Customer Service for assistance.

b. No – See question 3

3) Is the usable space (width) at the point of grip between the range of 1.102-2.002 [28.0-50.9 mm] for size 1 and 2 units or 1.257-2.322 [31.9-59.0 mm] for size 4 units [(1)]?

a. Yes – All tip descriptions with the prefix "Single"

b. No – See question 4

4) Is the usable space (width) at the point of grip ≥ 2.002 [50.9 mm] for size 1 and 2 units or ≥ 2.322 [59.0 mm] for size 4 units [(1)]?

a. Yes – All tip descriptions with the prefix "Double"

5) Is the point of grip flat or does it have shape [(2) (3)]?

a. Flat – All tips

b. Shaped (curved) – SCx, Tx005-Tx010, Tx019-Tx020, SUB, Tx040, Tx066, Tx068, Tx069, SDx, Tx083, Tx181-Tx183, or machinable tip kits

c. Shaped (angled) – Tx001-Tx004, Tx071, Tx072, Tx074, Tx075, Tx034-Tx039, Tx077-Tx082, or machinable tip kits

d. Shaped (irregular) – Tx005-Tx010, SUB, Tx040, Tx066, Tx068, Tx069, Tx083, Tx060, Tx061, Tx084, or machinable tip kits

6) Is the point of grip beyond a bend or fold in the material?

a. Yes – Tx030-Tx033 or Tx017

b. No – See question 5

7) Is the material being gripped thin (pliable) and subject to warping, bending, or damage when gripped or moved?

a. Yes – DUB, Tx041, Tx067-Tx069, DDx, Tx030-Tx039, Tx077-Tx082, Tx042-Tx047, Tx052, Tx055, Tx018, or machinable tip kits

b. No – All tips

8) Are nicks, dings, and scratches permissible at the point of grip [(4)]?

a. Yes – All tips

b. No – Tx005-Tx010, SUB, Tx040, Tx066, DUB, Tx041, Tx067-Tx069, Tx042-Tx047, Tx052, Tx055, or machinable tip kits

9) Will the clamp be used in a hot stamping application [(5)]?

a. Yes – Tx180-Tx187 or Tx017

b. No – All tips

NOTES:

1) Values include 0.236 [6.0 mm] clearance on each side of the jaw/tip.

2) Tips are designed for specific material shapes, sizes, and configurations.

3) Spherical mounting brackets allow the clamp to pivot, swivel, and rotate, thus ensuring precise alignment at the point of grip.

4) Lowering the air pressure to the clamp will reduce the amount of grip force applied to the part. This may reduce part damage due to contact pressure (dings), but will increase the possibility of slippage (scratches).

5) Refer to G11 option in Accessory Options section for high temp applications.

PHD has literally made thousands of tips for customers with specific design requirements. Here are some of the more exotic tip applications:

A	Needle point tips pierce and grip material without slipping.
B	Swivel tips and tip extensions pick up parts that are randomly oriented to the clamp.
C	Special articulating wing tips used to grip and stretch material.
D	Arc-shaped tips grip part with a similar shape while embedded sensor provides part present detection.
E	90° offset tips move clamp away from part and adjacent tooling while retaining the ideal point of grip.
F	PHD finger blank kits with integral character and anvil used to stamp material.

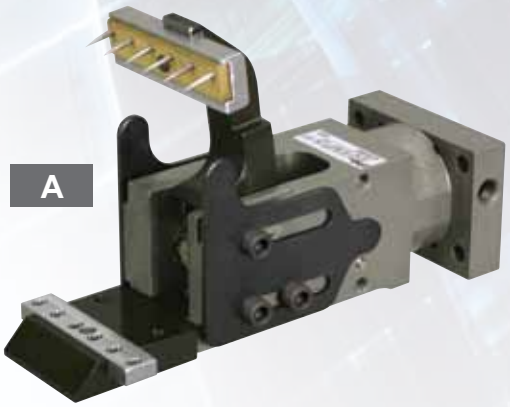

A

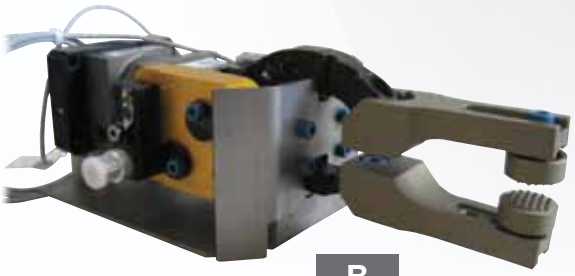

B

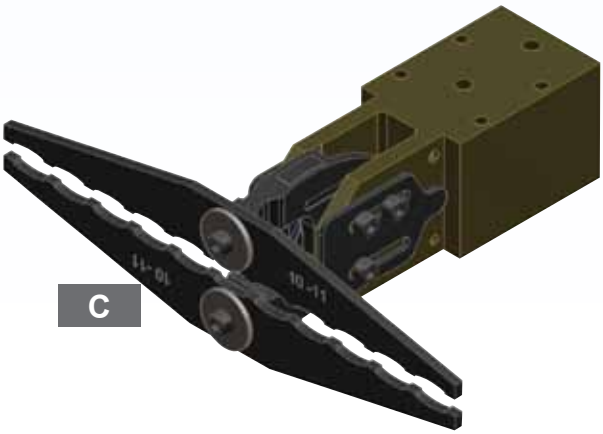

C

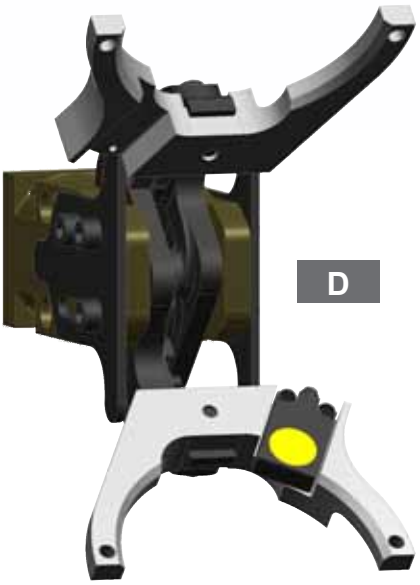

D

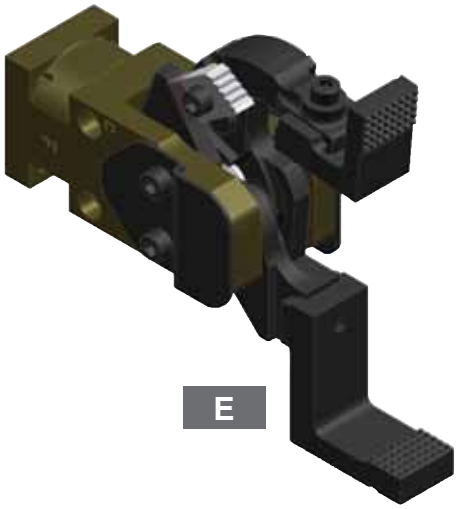

E

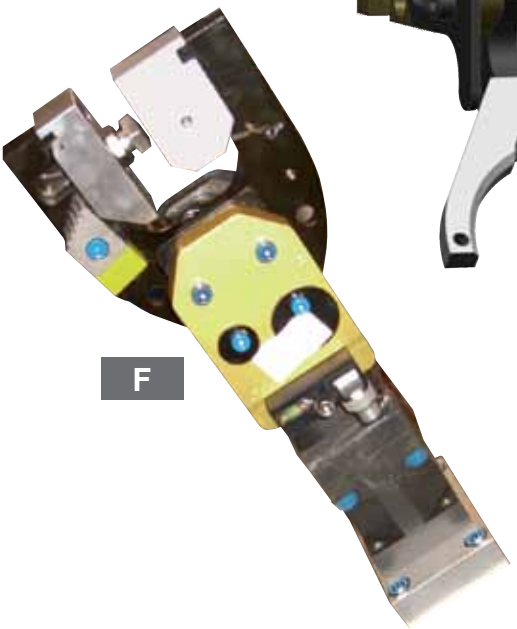

F

ORDERING DATA:

GRM 2 S S - 2 - 45 DCB - 45 DDB - TA017 - TB017

- **2** — CLAMP SIZE: 1 - GRM1, 2 - GRM2, 4 - GRM4
- **2** — DESIGN NO.: 2 - Imperial, 6 - Metric
- **DCB** — STANDARD TIPS (JAW A)
- **DDB** — STANDARD TIPS (JAW B)
- **TA017** — ACCESSORY TIPS (JAW A)
- **TB017** — ACCESSORY TIPS (JAW B)

Note: Standard tip options must be left blank when ordering accessory tips with the exception of Tx017 (Duckbill) tips.

Single Cone Point

Single No Scratch Socket

Single No Scratch Ball

Single Cone Point (Sharp)

Double Cone Point

Double Cone Point (Sharp)

Double Cone Point (High Temp)

SINGLE POINT TIPS (STEEL)

	TIP DESCRIPTION	MODEL NUMBER OR ACCESSORY CODE	TIP COLOR	TIP WEIGHT lb	TIP WEIGHT kg
STANDARD	Single Cone Point	SCB	Black	0.03	0.01
		SCS	Silver		
		SCG	Gold		
		SCR	Red		
ACCESSORY	Single No Scratch Socket	-Tx005	Black	0.04	0.02
		-Tx006	Silver		
		-Tx007	Gold		
	Single No Scratch Ball	-Tx008	Black	0.04	0.02
		-Tx009	Silver		
		-Tx010	Gold		
	Single Cone Point (Sharp)	-Tx019	Black	0.04	0.02
		-Tx020	Silver		
		-Tx021	Gold		

DOUBLE POINT TIPS (STEEL)

	TIP DESCRIPTION	MODEL NUMBER OR ACCESSORY CODE	TIP COLOR	TIP WEIGHT lb	TIP WEIGHT kg
STANDARD	Double Cone Point	DCB	Black	0.14	0.06
		DCS	Silver		
		DCG	Gold		
		DCR	Red		
ACCESSORY	Double Cone Point (Sharp)	-Tx063	Black	0.14	0.06
		-Tx064	Silver		
		-Tx065	Gold		
	Double Cone Point (High Temp)	-Tx188	Black	0.13	0.06
		-Tx189	Silver		
		-Tx190	Gold		
		-Tx191	Red		

Single Urethane Black

Double Urethane Black

Single Hard Urethane Red

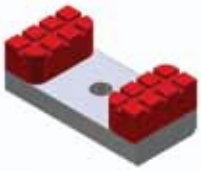

Double Hard Urethane Red

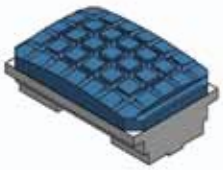

Double Rounded Hard Urethane Blue

Single Hard Urethane Blue

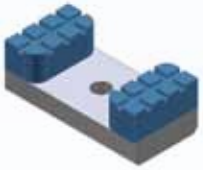

Double Hard Urethane Blue

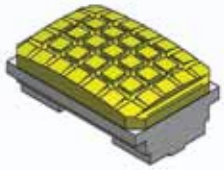

Double Rounded Hard Urethane Yellow

URETHANE PADS

TIP DESCRIPTION	MODEL NUMBER OR ACCESSORY CODE	TIP COLOR	TIP WEIGHT	
			lb	kg
Single Urethane Pad	SUB	Black	0.04	0.02
	-Tx040	Red	0.04	0.02
	-Tx066	Blue		
Double Urethane Pad	DUB	Black	0.10	0.05
	-Tx041	Red	0.10	0.05
	-Tx067	Blue		
Double Rounded Urethane Pad	-Tx068	Blue	0.14	0.06
	-Tx069	Yellow		

Urethane tips (with the exception of Tx068 and Tx069) are not recommended for use with sensing options Pxxxx, Dxxxx, Kxxxx, PAxxx, or PBxxx.

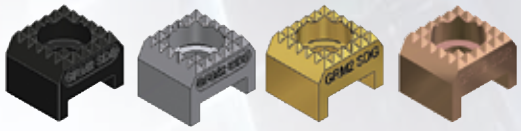

Single Diamond Point

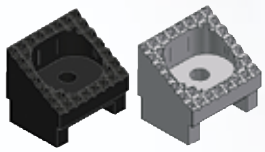

30° Single Diamond Point

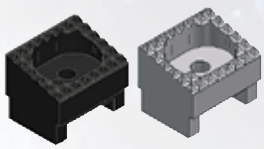

15° Single Diamond Point

NOTE: Use with single diamond point tips (SDx)

Single Drawbead (Short)

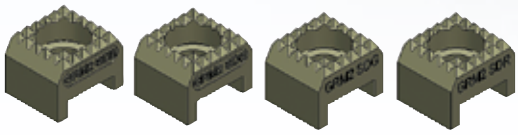

Single Diamond Point (High Temp)

SINGLE PAD TIPS (STEEL)

	TIP DESCRIPTION	MODEL NUMBER OR ACCESSORY CODE	TIP COLOR	TIP WEIGHT	
				lb	kg
STANDARD	Single Diamond Point	SDB	Black	0.09	0.04
		SDS	Silver		
		SDG	Gold		
		SDR	Red		
ACCESSORY	30° Single Diamond Point	-Tx001 (Upward) -Tx003 (Downward)	Black	0.10	0.05
		-Tx002 (Upward) -Tx004 (Downward)	Silver		
	15° Single Diamond Point	-Tx071 (Upward) -Tx074 (Downward)	Black	0.10	0.05
		-Tx072 (Upward) -Tx075 (Downward)	Silver		
	Single Draw Bead (Short)	-Tx083	Black	0.08	0.03
	Single Diamond Point (High Temp)	-Tx180	Black	0.09	0.04
		-Tx181	Silver		
		-Tx182	Gold		
		-Tx183*	Red		

NOTE: All high temp tips have ceramic coating that is dull gold in color
* - Tx183 available on size 2 only

Double Diamond Point

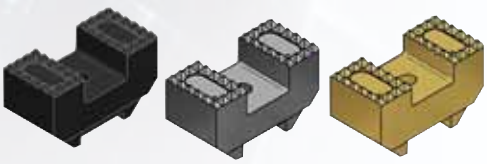

Offset Double Diamond Point (Long)

Offset Double Diamond Point (Short)

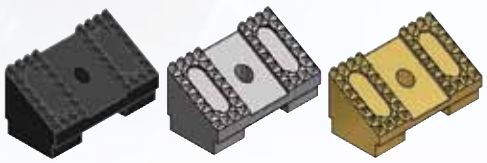

30° Double Diamond Point

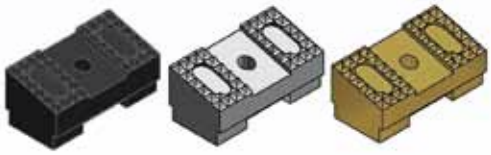

15° Double Diamond Point

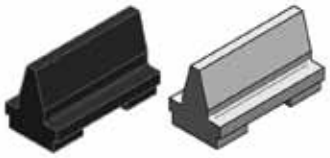

Double Drawbead (Tall)

Double Drawbead (Short)

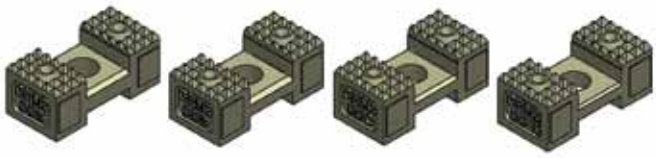

Double Diamond Point (High Temp)

DOUBLE PAD TIPS (STEEL)

	TIP DESCRIPTION	MODEL NUMBER OR ACCESSORY CODE	TIP COLOR	TIP WEIGHT lb	TIP WEIGHT kg
STANDARD	Double Diamond Point	DDB	Black	0.13	0.06
		DDS	Silver		
		DDG	Gold		
		DDR	Red		
ACCESSORY	Double Offset Tips	-Tx030 (Short)	Black	0.14	0.06
		-Tx031	Black	0.20	0.09
		-Tx032	Silver		
		-Tx033	Gold		
	30° Double Diamond Point	-Tx034 (Upward) -Tx037 (Downward)	Black	0.18	0.08
		-Tx035 (Upward) -Tx038 (Downward)	Silver		
		-Tx036 (Upward) -Tx039 (Downward)	Gold		
	15° Double Diamond Point	-Tx077 (Upward) -Tx080 (Downward)	Black	0.18	0.08
		-Tx078 (Upward) -Tx081 (Downward)	Silver		
		-Tx079 (Upward) -Tx082 (Downward)	Gold		
	Double Draw Bead (Tall)	-Tx060	Black	0.17	0.08
		-Tx061	Silver		
	Double Draw Bead (Short)	-Tx084	Black	0.13	0.06
	Double Diamond Point (High Temp)	-Tx184	Black	0.13	0.06
		-Tx185	Silver		
		-Tx186	Gold		
		-Tx187*	Red		

Note: All high temp tips have ceramic coating which is dull gold in color.
*Tx187 available on size 2 only

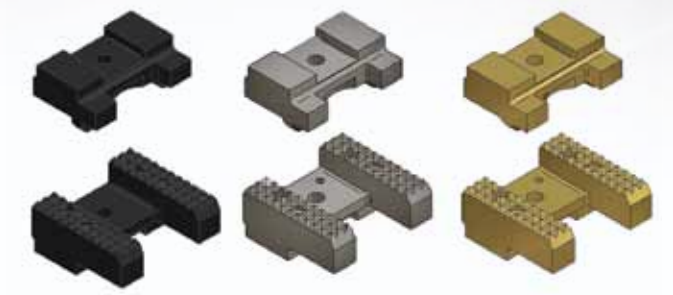

Double Diamond (Switch Mounting) to Double Cone

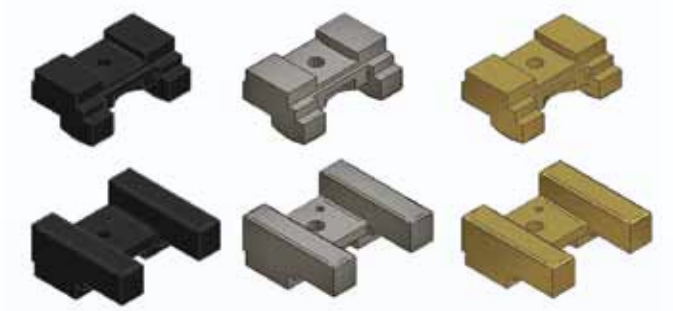

Double No Scratch (Switch Mounting)

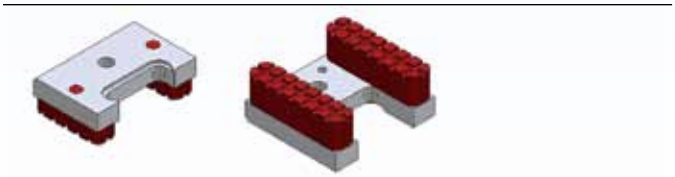

Double Urethane (Switch Mounting)

DOUBLE PAD TIPS (SWITCH MOUNTING)

	TIP DESCRIPTION	MODEL NUMBER OR ACCESSORY CODE	TIP COLOR	TIP WEIGHT lb	TIP WEIGHT kg
ACCESSORY	Double Cone Point	-Tx022	Black	0.14	0.06
		-Tx023	Silver		
		-Tx024	Gold		
	Double Diamond (Switch Mounting)	-Tx025	Black	0.19	0.09
		-Tx026	Silver		
		-Tx027	Gold		
	Double No Scratch (Rounded)	-Tx042	Black	0.15	0.07
		-Tx043	Silver		
		-Tx044	Gold		
	Double No Scratch (Flat - Switch Mounting)	-Tx045	Black	0.20	0.09
		-Tx046	Silver		
		-Tx047	Gold		
	Double Urethane (Short)	-Tx052	Red	0.10	0.05
	Double Urethane (Long - Switch Mounting)	-Tx055	Red	0.13	0.06

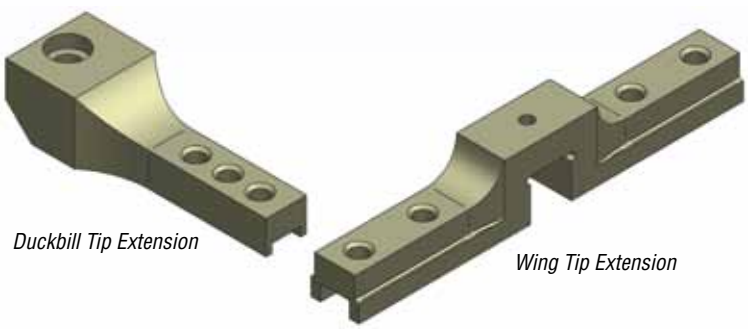

Duckbill Tip Extension

Wing Tip Extension

TIP EXTENSIONS

	TIP DESCRIPTION	ACCESSORY CODE	TIP WEIGHT lb	TIP WEIGHT kg
ACCESSORY	Duckbill Tip Extension	-Tx017	0.19	0.09
	Wing Tip Extension	-Tx018	0.26	0.12

GRM1 & GRM2 ONLY

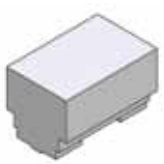

Machinable Steel Tip

Machinable Urethane Tip

MACHINABLE TIPS

	TIP DESCRIPTION	KIT NUMBER	TIP KIT WEIGHT lb	TIP KIT WEIGHT kg
ACCESSORY	Machinable Steel Tip	65174-03	0.37	0.17
	Machinable Urethane Tip	65174-04	0.16	0.07

Jaw Style "G" Finger Blank

ALUMINUM FINGER BLANKS FOR JAW STYLE G

	CLAMP SIZE	JAW ROTATION	KIT NUMBER	TIP KIT WEIGHT lb	TIP KIT WEIGHT kg
KITS	2	All	65225-02	0.60	0.27
	4	70° x 70°	65226-01	0.96	0.44
		All Other Rotations	65226-02	1.10	0.50

TIP MODEL NUMBER OR ACCESSORY CODE FOR JAW A AND JAW B

xxx	xxx	Standard Tip
-Txxx	-Txxx	Accessory Tip
-Txxx	xxx	Accessory/Standard Tip Combination

NOTE:
1) Jaw A tips and Jaw B tips can be reversed.

COLORS IN CHART REPRESENT TIP COLORS

[a]	Black
[b]	Silver
[c]	Gold
[d]	Red or Red Urethane
[e]	Blue Urethane
[f]	Yellow Urethane
[g]	Gold High Temp or Tip Extensions
[b] [a]	Silver/Black Tip Combination
[c] [a]	Gold/Black Tip Combination
[c] [b]	Gold/Silver Tip Combination
[d] [c]	Red/Gold Tip Combination
[e] [f]	Blue/Yellow Urethane Tip Combination

MATERIAL THICKNESS RANGE (mm)

	JAW A	JAW B	0.00 - 0.10	0.11 - 0.20	0.21 - 0.30	0.31 - 0.40	0.41 - 0.50	0.51 - 0.60	0.61 - 0.70	0.71 - 0.80	0.81 - 0.90	0.91 - 1.00	1.01 - 1.10	1.11 - 1.20	1.21 - 1.30	1.31 - 1.40	1.41 - 1.50	1.51 - 1.60	1.61 - 1.70	1.71 - 1.80	1.81 - 1.90	1.91 - 2.00	2.01 - 2.10	2.11 - 2.20	2.21 - 2.30	2.31 - 2.40	2.41 - 2.50	2.51 - 2.60	2.61 - 2.70	2.71 - 2.80	2.81 - 2.90	2.91 - 3.00	3.01 - 3.10	3.11 - 3.20	3.21 - 3.30	3.31 - 3.40	3.41 - 3.50	3.51 - 3.60	3.61 - 3.70	3.71 - 3.75
SINGLE POINT TIPS	SCB	SDB				[a] (Note 1)																																		
	SCS	SDS											[b]																											
	SCG	SDG																					[c]																	
	-TA005	-TB008	[a]																																					
	-TA006	-TB009																[b]																						
	-TA007	-TB010																								[c]														
	-TA019	SDB						[a]																																
	-TA020	SDB											[b]																											
	-TA021	SDG																					[c]																	
DOUBLE POINT TIPS	DCB	DDB	[a]																																					
	DCS	DDS											[b]																											
	DCG	DDG																					[c]																	
	-TA063	DDB				[a]																																		
	-TA063	DDG											[a] [c]																											
	-TA065	DDG																					[c]																	
	-TA188	-TB184	[g]																																					
	-TA189	-TB185											[g]																											
	-TA190	-TB186																					[g]																	
URETHANE PADS	SUB	SUB	[a]																																					
	-TA040	-TB040						[d]																																
	-TA066	-TB066									[e]																													
	DUB	DUB	[a]																																					
	-TA041	-TB041				[d]																																		
	-TA067	-TB067				[e]																																		

NOTES:
1) TIP OPTIONS NOT RECOMMENDED FOR MATERIAL THICKNESS BELOW 0.25 mm.
2) SCx-SCx AND DCx-DCx TIP COMBINATIONS ARE NOT ALLOWED DUE TO POINT OVERLAP.

MATERIAL THICKNESS RANGE (mm)

	JAW A	JAW B	0.00 - 0.10	0.11 - 0.20	0.21 - 0.30	0.31 - 0.40	0.41 - 0.50	0.51 - 0.60	0.61 - 0.70	0.71 - 0.80	0.81 - 0.90	0.91 - 1.00	1.01 - 1.10	1.11 - 1.20	1.21 - 1.30	1.31 - 1.40	1.41 - 1.50	1.51 - 1.60	1.61 - 1.70	1.71 - 1.80	1.81 - 1.90	1.91 - 2.00	2.01 - 2.10	2.11 - 2.20	2.21 - 2.30	2.31 - 2.40	2.41 - 2.50	2.51 - 2.60	2.61 - 2.70	2.71 - 2.80	2.81 - 2.90	2.91 - 3.00	3.01 - 3.10	3.11 - 3.20	3.21 - 3.30	3.31 - 3.40	3.41 - 3.50	3.51 - 3.60	3.61 - 3.70	3.71 - 3.75
SINGLE PAD TIPS	SDB	SDB	[a]																																					
SINGLE PAD TIPS	SDS	SDS											[b]																											
SINGLE PAD TIPS	SDG	SDG																					[c]																	
SINGLE PAD TIPS	-TA001	-TB001						[a]																																
SINGLE PAD TIPS	-TA002	-TB002											[b]																											
SINGLE PAD TIPS	-TA003	-TB003						[a] (Note 1)																																
SINGLE PAD TIPS	-TA004	-TB004											[b] (Note 1)																											
SINGLE PAD TIPS	-TA071	-TB071						[a]																																
SINGLE PAD TIPS	-TA071	-TB072											[a]																											
													[b]																											
SINGLE PAD TIPS	-TA072	-TB072																[b]																						
SINGLE PAD TIPS	-TA074	-TB074						[a] (Note 1)																																
SINGLE PAD TIPS	-TA074	-TB075											[a] (Note 1)																											
													[b] (Note 1)																											
SINGLE PAD TIPS	-TA075	-TB075																[b] (Note 1)																						
SINGLE PAD TIPS	-TA083	SDB																																						
SINGLE PAD TIPS	-TA083	SDG																																						
																		[a]																						
																		[c]																						
SINGLE PAD TIPS	-TA180	-TB180	[g]																																					
SINGLE PAD TIPS	-TA181	-TB181											[g]																											
SINGLE PAD TIPS	-TA182	-TB182																					[g]																	
DOUBLE PAD TIPS	DDB	DDB	[a]																																					
DOUBLE PAD TIPS	DDS	DDS											[b]																											
DOUBLE PAD TIPS	DDG	DDG																					[c]																	
DOUBLE PAD TIPS	-TA034	-TB034				[a]																																		
DOUBLE PAD TIPS	-TA034	-TB035									[a]																													
											[b]																													
DOUBLE PAD TIPS	-TA035	-TB035																[b]																						
DOUBLE PAD TIPS	-TA035	-TB036																								[b]														
																										[c]														
DOUBLE PAD TIPS	-TA036	-TB036																																[c]						
DOUBLE PAD TIPS	-TA037	-TB037				[a] (Note 1)																																		
DOUBLE PAD TIPS	-TA037	-TB038									[a] (Note 1)																													
											[b] (Note 1)																													
DOUBLE PAD TIPS	-TA037	-TB039																[b] (Note 1)																						
DOUBLE PAD TIPS	-TA038	-TB039																								[b] (Note 1)														
																										[c] (Note 1)														
DOUBLE PAD TIPS	-TA039	-TB039																																[c] (Note 1)						
DOUBLE PAD TIPS	-TA077	-TB077						[a]																																
DOUBLE PAD TIPS	-TA077	-TB078											[a]																											
													[b]																											
DOUBLE PAD TIPS	-TA078	-TB078																[b]																						
DOUBLE PAD TIPS	-TA078	-TB079																								[b]														
																										[c]														
DOUBLE PAD TIPS	-TA079	-TB079																																[c]						
DOUBLE PAD TIPS	-TA080	-TB080						[a] (Note 1)																																
DOUBLE PAD TIPS	-TA080	-TB081											[a] (Note 1)																											
													[b] (Note 1)																											
DOUBLE PAD TIPS	-TA081	-TB081																[b] (Note 1)																						
DOUBLE PAD TIPS	-TA081	-TB082																								[b] (Note 1)														
																										[c] (Note 1)														
DOUBLE PAD TIPS	-TA082	-TB082																																[c] (Note 1)						
DOUBLE PAD TIPS	-TA060	-TB030	[a]																																					
DOUBLE PAD TIPS	-TA084	DDB																																						
																		[a]																						
DOUBLE PAD TIPS	-TA084	DDG																																						
																		[c]																						
DOUBLE PAD TIPS	-TA184	-TB184	[g]																																					
DOUBLE PAD TIPS	-TA185	-TB185											[g]																											
DOUBLE PAD TIPS	-TA186	-TB186																					[g]																	

NOTE:
1) TIP OPTIONS NOT AVAILABLE FOR JAW STYLE F.

TIP MODEL NUMBER OR ACCESSORY CODE FOR JAW A AND JAW B

xxx	xxx	Standard Tip
-Txxx	-Txxx	Accessory Tip
-Txxx	xxx	Accessory/Standard Tip Combination

NOTE:
1) Jaw A tips and Jaw B tips can be reversed.

COLORS IN CHART REPRESENT TIP COLORS

[a]	Black
[b]	Silver
[c]	Gold
[d]	Red or Red Urethane
[e]	Blue Urethane
[f]	Yellow Urethane
[g]	Gold High Temp or Tip Extensions
[b] [a]	Silver/Black Tip Combination
[c] [a]	Gold/Black Tip Combination
[c] [b]	Gold/Silver Tip Combination
[d] [c]	Red/Gold Tip Combination
[e] [f]	Blue/Yellow Urethane Tip Combination

MATERIAL THICKNESS RANGE (mm)

	JAW A	JAW B	0.00 - 0.10	0.11 - 0.20	0.21 - 0.30	0.31 - 0.40	0.41 - 0.50	0.51 - 0.60	0.61 - 0.70	0.71 - 0.80	0.81 - 0.90	0.91 - 1.00	1.01 - 1.10	1.11 - 1.20	1.21 - 1.30	1.31 - 1.40	1.41 - 1.50	1.51 - 1.60	1.61 - 1.70	1.71 - 1.80	1.81 - 1.90	1.91 - 2.00	2.01 - 2.10	2.11 - 2.20	2.21 - 2.30	2.31 - 2.40	2.41 - 2.50	2.51 - 2.60	2.61 - 2.70	2.71 - 2.80	2.81 - 2.90	2.91 - 3.00	3.01 - 3.10	3.11 - 3.20	3.21 - 3.30	3.31 - 3.40	3.41 - 3.50	3.51 - 3.60	3.61 - 3.70	3.71 - 3.80	3.81 - 3.90	3.91 - 4.00	4.01 - 4.10	4.11 - 4.20	4.21 - 4.30	4.31 - 4.40	4.41 - 4.50	4.51 - 4.60	4.61 - 4.70	4.71 - 4.80	4.81 - 4.90	4.91 - 5.00
SINGLE POINT TIPS	SCB	SDB	[a] S C H K L R																																																	
	SCS	SDS																[b] S C H K L R																																	
	SCG	SDG																															[c] S C H K L																			
	SCR	SDR																															[d] R									[d] S C H K L					[d] S C K				
	-TA005	-TB008	[a] S K R																																																	
	-TA006	-TB009																[b] S K R																																	
	-TA007	-TB010																															[c] S K																			
	-TA019	SDB	[a] S C H K L R																																																	
	-TA020	SDS																[b] S C H K L R																																	
	-TA021	SDG																															[c] S C H K L																			
	-TA021	SDR																															[d] R									[d] S C H K L									
DOUBLE POINT TIPS	DCB	DDB	[a] S D J K M R																																																	
	DCS	DDS																[b] S D J K M R																																	
	DCG	DDG																															[c] S D J K M																			
	DCR	DDR																															[d] R									[d] S D J K M					[d] S D K				
	-TA063	DDB	[a] S D J K M R																																																	
	-TA064	DDS																[b] S D J K M R																																	
	-TA065	DDG																															[c] S D J K M																			
	-TA065	DDR																															[d] R									[d] S D J K M									
	-TA188	-TB184	[g] S C H K L R																																																	
	-TA189	-TB185																[g] S C H K L R																																	
	-TA190	-TB186																															[g] S C H K L																			
	-TA191	-TB187																																								[g] S C H K L					[g] S C K				
URETHANE PADS	SUB	SUB	[a] S C H K L R																																							[a] S C H K L					[a] S C K				
	-TA040	-TB040	[d] S C H K L R																									[d] S C H K L																								
	-TA066	-TB066	[e] S C H K L R																									[e] S C H K L																								
	DUB	DUB	[a] S D J K M R																																							[a] S D J K M					[a] S D K				
	-TA041	-TB041	[d] S D J K M R																									[d] S D J K M																								
	-TA067	-TB067	[e] S D J K M R																									[e] S D J K M																								
	-TA068	-TB068	[e] S D J K M R																									[e] S D J K M																								
	-TA069	-TB069	[f] S D J K M																																																	
	-TA069	-TB069								[f] S D J K M (Note 3)								[e] S D J K M (Note 3)																																				
	-TA068	-TB068								[e] R (Note 3)																																										

NOTES:

1) xxx -Txxxx (RED TEXT) INDICATES TIP OPTIONS AVAILABLE ON SIZE 2 UNITS ONLY.
xxx -Txxxx (BLACK TEXT) INDICATES TIP OPTIONS AVAILABLE ON SIZE 2 & 4 UNITS.

2) S K R S K R D R S K INDICATES AVAILABLE JAW STYLES.

3) (NOTE 3) (NOTE 3) INDICATES MATERIAL THICKNESS RANGE WHEN USED WITH Dxxxx, Pxxxx, OR Kxxxx OPTIONS ONLY.

4) C, D, H, J, L, OR M JAW STYLES DO NOT REQUIRE TIP OPTIONS ON JAW B (LEAVE BLANK).

5) C, D, K, L, M, OR R JAW STYLES AVAILABLE ON SIZE 2 UNITS ONLY.

6) SCx-SCx AND DCx-DCx TIP COMBINATIONS ARE NOT ALLOWED DUE TO POINT OVERLAP.

	JAW A	JAW B	MATERIAL THICKNESS RANGE (mm) 0.00 - 0.10	0.11 - 0.20	0.21 - 0.30	0.31 - 0.40	0.41 - 0.50	0.51 - 0.60	0.61 - 0.70	0.71 - 0.80	0.81 - 0.90	0.91 - 1.00	1.01 - 1.10	1.11 - 1.20	1.21 - 1.30	1.31 - 1.40	1.41 - 1.50	1.51 - 1.60	1.61 - 1.70	1.71 - 1.80	1.81 - 1.90	1.91 - 2.00	2.01 - 2.10	2.11 - 2.20	2.21 - 2.30	2.31 - 2.40	2.41 - 2.50	2.51 - 2.60	2.61 - 2.70	2.71 - 2.80	2.81 - 2.90	2.91 - 3.00	3.01 - 3.10	3.11 - 3.20	3.21 - 3.30	3.31 - 3.40	3.41 - 3.50	3.51 - 3.60	3.61 - 3.70	3.71 - 3.80	3.81 - 3.90	3.91 - 4.00	4.01 - 4.10	4.11 - 4.20	4.21 - 4.30	4.31 - 4.40	4.41 - 4.50	4.51 - 4.60	4.61 - 4.70	4.71 - 4.80	4.81 - 4.90	4.91 - 5.00
SINGLE PAD TIPS	SDB	SDB	[a] S C H K L R																																																	
	SDS	SDS																[b] S C H K L R																																	
	SDG	SDG																															[c] S C H K L																			
	SDR	SDR																															[d] R										[d] S C H K L					[d] S C K				
	-TA001	-TB001	[a] S K R																																																	
	-TA002	-TB002																[b] S K R																																	
	-TA003	-TB003	[a] S K R																																																	
	-TA004	-TB004																[b] S K R																																	
	-TA071	-TB071	[a] S K R																																																	
	-TA072	-TB072																[b] S K R																																	
	-TA074	-TB074	[a] S K R																																																	
	-TA075	-TB075																[b] S K R																																	
	-TA083	SDB	[a] S C H K L R																																																	
	-TA180	-TB180	[g] S C H K L R																																																	
	-TA181	-TB181																[g] S C H K L R																																	
	-TA182	-TB182																															[g] S C H K L																			
	-TA183	-TB183																																									[g] S C H K L					[g] S C K				
DOUBLE PAD TIPS	DDB	DDB	[a] S C H K L R																																																	
	DDS	DDS																[b] S C H K L R																																	
	DDG	DDG																															[c] S C H K L																			
	DDR	DDR																															[d] R										[d] S C H K L					[d] S C K				
	-TA030	-TB031	[a] S K R																																																	
	-TA030	-TB032																[b] S K R																																	
	-TA030	-TB033																															[c] S K																			
	-TA034	-TB034	[a] S K R																																																	
	-TA035	-TB035																[b] S K R																																	
	-TA036	-TB036																															[c] S K																			
	-TA037	-TB037	[a] S K R																																																	
	-TA038	-TB038																[b] S K R																																	
	-TA039	-TB039																															[c] S K																			
	-TA077	-TB077	[a] S K R																																																	
	-TA078	-TB078																[b] S K R																																	
	-TA079	-TB079																															[c] S K																			
	-TA080	-TB080	[a] S K R																																																	
	-TA081	-TB081																[b] S K R																																	
	-TA082	-TB082																															[c] S K																			
	-TA060	-TB030	[a] S K R																																																	
	-TA061	-TB030																[b] S K R																																	
	-TA084	DDB	[a] S D J K M R																																																	
	-TA184	-TB184	[g] S D J K M R																																																	
	-TA185	-TB185																[g] S D J K M R																																	
	-TA186	-TB186																															[g] S D J K M																			
	-TA187	-TB187																																									[g] S D J K M					[g] S D K				

NOTES:

1) xxx -Txxxx (RED TEXT) INDICATES TIP OPTIONS AVAILABLE ON SIZE 2 UNITS ONLY.
   xxx -Txxxx (BLACK TEXT) INDICATES TIP OPTIONS AVAILABLE ON SIZE 2 & 4 UNITS.

2) S K R S K R D R S K INDICATES AVAILABLE JAW STYLES.

3) C, D, H, J, L, OR M JAW STYLES DO NOT REQUIRE TIP OPTIONS ON JAW B (LEAVE BLANK).

4) C, D, K, L, M, OR R JAW STYLES AVAILABLE ON SIZE 2 UNITS ONLY.

<table>
<tr><th rowspan="2"></th><th rowspan="2">JAW A</th><th rowspan="2">JAW B</th><th colspan="50">MATERIAL THICKNESS RANGE (mm)</th></tr>
<tr><th>0.00 - 0.10</th><th>0.11 - 0.20</th><th>0.21 - 0.30</th><th>0.31 - 0.40</th><th>0.41 - 0.50</th><th>0.51 - 0.60</th><th>0.61 - 0.70</th><th>0.71 - 0.80</th><th>0.81 - 0.90</th><th>0.91 - 1.00</th><th>1.01 - 1.10</th><th>1.11 - 1.20</th><th>1.21 - 1.30</th><th>1.31 - 1.40</th><th>1.41 - 1.50</th><th>1.51 - 1.60</th><th>1.61 - 1.70</th><th>1.71 - 1.80</th><th>1.81 - 1.90</th><th>1.91 - 2.00</th><th>2.01 - 2.10</th><th>2.11 - 2.20</th><th>2.21 - 2.30</th><th>2.31 - 2.40</th><th>2.41 - 2.50</th><th>2.51 - 2.60</th><th>2.61 - 2.70</th><th>2.71 - 2.80</th><th>2.81 - 2.90</th><th>2.91 - 3.00</th><th>3.01 - 3.10</th><th>3.11 - 3.20</th><th>3.21 - 3.30</th><th>3.31 - 3.40</th><th>3.41 - 3.50</th><th>3.51 - 3.60</th><th>3.61 - 3.70</th><th>3.71 - 3.80</th><th>3.81 - 3.90</th><th>3.91 - 4.00</th><th>4.01 - 4.10</th><th>4.11 - 4.20</th><th>4.21 - 4.30</th><th>4.31 - 4.40</th><th>4.41 - 4.50</th><th>4.51 - 4.60</th><th>4.61 - 4.70</th><th>4.71 - 4.80</th><th>4.81 - 4.90</th><th>4.91 - 5.00</th></tr>
<tr><td rowspan="14">DOUBLE PAD TIPS (SWITCH MOUNTING)</td><td>-TA022</td><td>-TB025</td><td colspan="15">[a] S K R</td><td colspan="35"></td></tr>
<tr><td>-TA025</td><td>-</td><td colspan="15">[a] D</td><td colspan="35"></td></tr>
<tr><td>-TA023</td><td>-TB026</td><td colspan="15"></td><td colspan="15">[b] S K R</td><td colspan="20"></td></tr>
<tr><td>-TA026</td><td>-</td><td colspan="15"></td><td colspan="15">[b] D</td><td colspan="20"></td></tr>
<tr><td>-TA024</td><td>-TB027</td><td colspan="30"></td><td colspan="10">[c] S K</td><td colspan="10"></td></tr>
<tr><td>-TA027</td><td>-</td><td colspan="30"></td><td colspan="10">[c] D</td><td colspan="10"></td></tr>
<tr><td>-TA042</td><td>-TB045</td><td colspan="15">[a] S K R</td><td colspan="35"></td></tr>
<tr><td>-TA045</td><td>-</td><td colspan="15">[a] D</td><td colspan="35"></td></tr>
<tr><td>-TA043</td><td>-TB046</td><td colspan="15"></td><td colspan="15">[b] S K R</td><td colspan="20"></td></tr>
<tr><td>-TA046</td><td>-</td><td colspan="15"></td><td colspan="15">[b] D</td><td colspan="20"></td></tr>
<tr><td>-TA044</td><td>-TB047</td><td colspan="30"></td><td colspan="10">[c] S K</td><td colspan="10"></td></tr>
<tr><td>-TA047</td><td>-</td><td colspan="30"></td><td colspan="10">[c] D</td><td colspan="10"></td></tr>
<tr><td>-TA052</td><td>-TB055</td><td colspan="23">[d] S K R</td><td colspan="7">[d] S K</td><td colspan="20"></td></tr>
<tr><td>-TA055</td><td>-</td><td colspan="30">[d] D</td><td colspan="20"></td></tr>
<tr><td rowspan="2">TIP EXT.</td><td>-TA017</td><td>-TB017</td><td colspan="50">[g] S (Can be ordered with standard tips attached - specify standard tips in ordering data)</td></tr>
<tr><td>-TA018</td><td>-TB018</td><td colspan="50">[g] S (Cannot be ordered with standard tips attached - order standard tips separately as kits)</td></tr>
</table>

NOTES:

1) xxx -Txxxx (RED TEXT) INDICATES TIP OPTIONS AVAILABLE ON SIZE 2 UNITS ONLY.
   xxx -Txxxx (BLACK TEXT) INDICATES TIP OPTIONS AVAILABLE ON SIZE 2 & 4 UNITS.
2) S K R S K R D R S K INDICATES AVAILABLE JAW STYLES.
3) C, D, H, J, L, OR M JAW STYLES DO NOT REQUIRE TIP OPTIONS ON JAW B (LEAVE BLANK).
4) C, D, K, L, M, OR R JAW STYLES AVAILABLE ON SIZE 2 UNITS ONLY.

TIP MODEL NUMBER OR ACCESSORY CODE FOR JAW A AND JAW B

xxx	xxx	Standard Tip
-Txxx	-Txxx	Accessory Tip
-Txxx	xxx	Accessory/Standard Tip Combination

NOTE:
1) Jaw A tips and Jaw B tips can be reversed.

COLORS IN CHART REPRESENT TIP COLORS

[a]	Black
[b]	Silver
[c]	Gold
[d]	Red or Red Urethane
[e]	Blue Urethane
[f]	Yellow Urethane
[g]	Gold High Temp or Tip Extensions
[b] [a]	Silver/Black Tip Combination
[c] [a]	Gold/Black Tip Combination
[c] [b]	Gold/Silver Tip Combination
[d] [c]	Red/Gold Tip Combination
[e] [f]	Blue/Yellow Urethane Tip Combination

MATERIAL THICKNESS RANGE (mm)

	JAW A	JAW B	0.00 - 0.10	0.11 - 0.20	0.21 - 0.30	0.31 - 0.40	0.41 - 0.50	0.51 - 0.60	0.61 - 0.70	0.71 - 0.80	0.81 - 0.85	0.86 - 0.90	0.91 - 1.00	1.01 - 1.10	1.11 - 1.20	1.21 - 1.30	1.31 - 1.40	1.41 - 1.50	1.51 - 1.52	1.53 - 1.60	1.61 - 1.70	1.71 - 1.80	1.81 - 1.90	1.91 - 1.94	1.95 - 2.00	2.01 - 2.10	2.11 - 2.20	2.21 - 2.29	2.30 - 2.40	2.41 - 2.50	2.51 - 2.60	2.61 - 2.70	2.71 - 2.80	2.81 - 2.90	2.91 - 3.00	3.01 - 3.10	3.11 - 3.20	3.21 - 3.30	3.31 - 3.40
SINGLE POINT TIPS	SCB	SDB	[a]	[a]	[a]	[a]	[a]	[a]	[a]	[a]	[a]																												
	SCS	SDB										[b]	[b]																										
												[a]	[a]																										
	SCG	SDB														[c]	[c]																						
																[a]	[a]																						
	SCS	SDS																		[b]	[b]	[b]	[b]	[b]															
	SCG	SDS																							[c]	[c]	[c]												
																									[b]	[b]	[b]												
	SCG	SDG																											[c]	[c]	[c]								
	SCR	SDG																														[d]	[d]	[d]					
																																[c]	[c]	[c]					
	SCR	SDR																																	[d]	[d]	[d]	[d]	
	-TA005	-TB008	[a]	[a]	[a]	[a]	[a]	[a]	[a]	[a]	[a]																												
	-TA005	-TB009										[a]	[a]																										
												[b]	[b]																										
	-TA005	-TB010														[a]	[a]																						
																[c]	[c]																						
	-TA006	-TB009																		[b]	[b]	[b]	[b]	[b]															
	-TA006	-TB010																							[b]	[b]	[b]												
																									[c]	[c]	[c]												
	-TA007	-TB010																											[c]	[c]	[c]								
	-TA019	SDB	[a]	[a]	[a]	[a]	[a]	[a]	[a]	[a]	[a]																												
	-TA020	SDB										[b]	[b]																										
												[a]	[a]																										
	-TA021	SDB														[c]	[c]																						
																[a]	[a]																						
	-TA020	SDS																		[b]	[b]	[b]	[b]	[b]															
	-TA021	SDS																							[c]	[c]	[c]												
																									[b]	[b]	[b]												
	-TA021	SDG																											[c]	[c]	[c]								
	-TA021	SDR																														[c]	[c]	[c]					
																																[d]	[d]	[d]					

NOTES:

1) xxx -Txxxx (RED TEXT) INDICATES TIP OPTIONS AVAILABLE ON SIZE 2 UNITS ONLY.
xxx -Txxxx (BLACK TEXT) INDICATES TIP OPTIONS AVAILABLE ON SIZE 2 & 4 UNITS.

2) SCx-SCx AND DCx-DCx TIP COMBINATIONS ARE NOT ALLOWED DUE TO POINT OVERLAP.

MATERIAL THICKNESS RANGE (mm)

	JAW A	JAW B	0.00 - 0.10	0.11 - 0.20	0.21 - 0.30	0.31 - 0.40	0.41 - 0.50	0.51 - 0.60	0.61 - 0.70	0.71 - 0.80	0.81 - 0.85	0.86 - 0.90	0.91 - 1.00	1.01 - 1.10	1.11 - 1.20	1.21 - 1.30	1.31 - 1.40	1.41 - 1.50	1.51 - 1.52	1.53 - 1.60	1.61 - 1.70	1.71 - 1.80	1.81 - 1.90	1.91 - 1.94	1.95 - 2.00	2.01 - 2.10	2.11 - 2.20	2.21 - 2.29	2.30 - 2.40	2.41 - 2.50	2.51 - 2.60	2.61 - 2.70	2.71 - 2.80	2.81 - 2.90	2.91 - 3.00	3.01 - 3.10	3.11 - 3.20	3.21 - 3.30	3.31 - 3.40
DOUBLE POINT TIPS	DCB	DDB	[a]																																				
	DCS	DDB										[b]	[a]																										
	DCG	DDB														[c]	[a]																						
	DCS	DDS																		[b]																			
	DCG	DDS																							[c] [b]														
	DCG	DDG																											[c]										
	DCR	DDG																														[d] [c]							
	DCR	DDR																																		[d]			
	-TA063	DDB	[a]																																				
	-TA064	DDB										[b]	[a]																										
	-TA065	DDB														[c]	[a]																						
	-TA064	DDS																		[b]																			
	-TA065	DDS																							[c] [b]														
	-TA065	DDG																											[c]										
	-TA065	DDR																														[c] [d]							
	-TA188	-TB184	[g]																																				
	-TA189	-TB184										[g]																											
	-TA190	-TB184														[g]																							
	-TA189	-TB185																		[g]																			
	-TA190	-TB185																							[g]														
	-TA190	-TB186																											[g]										
	-TA191	-TB186																														[g]							
	-TA191	-TB187																																		[g]			
URETHANE PADS	SUB	SUB	[a]																																				
	-TA040	-TB040	[d]																																				
	-TA066	-TB066	[e]																																				
	DUB	DUB	[a]																																				
	-TA041	-TB041	[d]																																				
	-TA067	-TB067	[e]																																				
	-TA068	-TB068	[e]																																				
	-TA069	-TB069	[f]																																				
	-TA069	-TB069							[f] (Note 2)																														
	-TA068	-TB069														[e] (Note 2) [f] (Note 2)																							
	-TA068	-TB068																		[e] (Note 2)																			
SINGLE PAD TIPS	SDB	SDB	[a]																																				
	SDS	SDB										[b]	[a]																										
	SDG	SDB														[c]	[a]																						
	SDS	SDS																		[b]																			
	SDG	SDS																							[c] [b]														
	SDG	SDG																											[c]										
	SDR	SDG																														[d] [c]							
	SDR	SDR																																		[d]			
	-TA001	-TB001	[a]																																				
	-TA002	-TB001										[b]	[a]																										
	-TA002	-TB002														[b]																							
	-TA071	-TB071	[a]																																				
	-TA072	-TB071										[b]	[a]																										
	-TA072	-TB072														[b]																							
	-TA180	-TB180	[g]																																				
	-TA181	-TB180										[g]																											
	-TA182	-TB180														[g]																							
	-TA181	-TB181																		[g]																			
	-TA182	-TB181																							[g]														
	-TA182	-TB182																											[g]										
	-TA183	-TB182																														[g]							
	-TA183	-TB183																																		[g]			

NOTES:

1) xxx -Txxxx (RED TEXT) INDICATES TIP OPTIONS AVAILABLE ON SIZE 2 UNITS ONLY.
xxx -Txxxx (BLACK TEXT) INDICATES TIP OPTIONS AVAILABLE ON SIZE 2 & 4 UNITS.

2) (NOTE 2) (NOTE 2) INDICATES MATERIAL THICKNESS RANGE WHEN USED WITH Dxxxx, Pxxxx, OR Kxxxx OPTIONS ONLY.

3) SCx-SCx AND DCx-DCx TIP COMBINATIONS ARE NOT ALLOWED DUE TO POINT OVERLAP.

	JAW A	JAW B	0.00 - 0.10	0.11 - 0.20	0.21 - 0.30	0.31 - 0.40	0.41 - 0.50	0.51 - 0.60	0.61 - 0.70	0.71 - 0.80	0.81 - 0.85	0.86 - 0.90	0.91 - 1.00	1.01 - 1.10	1.11 - 1.20	1.21 - 1.30	1.31 - 1.40	1.41 - 1.50	1.51 - 1.52	1.53 - 1.60	1.61 - 1.70	1.71 - 1.80	1.81 - 1.90	1.91 - 1.94	1.95 - 2.00	2.01 - 2.10	2.11 - 2.20	2.21 - 2.29	2.30 - 2.40	2.41 - 2.50	2.51 - 2.60	2.61 - 2.70	2.71 - 2.80	2.81 - 2.90	2.91 - 3.00	3.01 - 3.10	3.11 - 3.20	3.21 - 3.30	3.31 - 3.40
			MATERIAL THICKNESS RANGE (mm)																																				
DOUBLE PAD TIPS	DDB	DDB	[a]																																				
DOUBLE PAD TIPS	DDS	DDB										[b]	[a]																										
DOUBLE PAD TIPS	DDG	DDB														[c]	[a]																						
DOUBLE PAD TIPS	DDS	DDS																		[b]																			
DOUBLE PAD TIPS	DDG	DDS																							[c] [b]														
DOUBLE PAD TIPS	DDG	DDG																											[c]										
DOUBLE PAD TIPS	DDR	DDG																														[d] [c]							
DOUBLE PAD TIPS	DDR	DDR																																		[d]			
DOUBLE PAD TIPS	-TA034	-TB034	[a]																																				
DOUBLE PAD TIPS	-TA035	-TB034										[b]	[a]																										
DOUBLE PAD TIPS	-TA036	-TB034														[c]	[a]																						
DOUBLE PAD TIPS	-TA035	-TB035																		[b]																			
DOUBLE PAD TIPS	-TA036	-TB035																							[c] [b]														
DOUBLE PAD TIPS	-TA036	-TB036																											[c]										
DOUBLE PAD TIPS	-TA077	-TB077	[a]																																				
DOUBLE PAD TIPS	-TA078	-TB077										[b]	[a]																										
DOUBLE PAD TIPS	-TA079	-TB077														[c]	[a]																						
DOUBLE PAD TIPS	-TA078	-TB078																		[b]																			
DOUBLE PAD TIPS	-TA079	-TB078																							[c] [b]														
DOUBLE PAD TIPS	-TA079	-TB079																											[c]										
DOUBLE PAD TIPS	-TA184	-TB184	[g]																																				
DOUBLE PAD TIPS	-TA185	-TB184										[g]																											
DOUBLE PAD TIPS	-TA186	-TB184														[g]																							
DOUBLE PAD TIPS	-TA185	-TB185																		[g]																			
DOUBLE PAD TIPS	-TA186	-TB185																							[g]														
DOUBLE PAD TIPS	-TA186	-TB186																											[g]										
DOUBLE PAD TIPS	-TA187	-TB186																														[g]							
DOUBLE PAD TIPS	-TA187	-TB187																																		[g]			
DOUBLE PAD TIPS (SWITCH MOUNTING)	-TA022	-TB025	[a]																																				
DOUBLE PAD TIPS (SWITCH MOUNTING)	-TA023	-TB025										[b]	[a]																										
DOUBLE PAD TIPS (SWITCH MOUNTING)	-TA024	-TB025														[c]	[a]																						
DOUBLE PAD TIPS (SWITCH MOUNTING)	-TA023	-TB026																		[b]																			
DOUBLE PAD TIPS (SWITCH MOUNTING)	-TA024	-TB026																							[c] [b]														
DOUBLE PAD TIPS (SWITCH MOUNTING)	-TA024	-TB027																											[c]										
DOUBLE PAD TIPS (SWITCH MOUNTING)	-TA042	-TB045	[a]																																				
DOUBLE PAD TIPS (SWITCH MOUNTING)	-TA043	-TB045										[b]	[a]																										
DOUBLE PAD TIPS (SWITCH MOUNTING)	-TA044	-TB045														[c]	[a]																						
DOUBLE PAD TIPS (SWITCH MOUNTING)	-TA043	-TB046																		[b]																			
DOUBLE PAD TIPS (SWITCH MOUNTING)	-TA044	-TB046																							[c] [b]														
DOUBLE PAD TIPS (SWITCH MOUNTING)	-TA044	-TB047																											[c]										
DOUBLE PAD TIPS (SWITCH MOUNTING)	-TA052	-TB055	[d]																																				

NOTE:

1) xxx -Txxxx (RED TEXT) INDICATES TIP OPTIONS AVAILABLE ON SIZE 2 UNITS ONLY.

xxx -Txxxx (BLACK TEXT) INDICATES TIP OPTIONS AVAILABLE ON SIZE 2 & 4 UNITS.

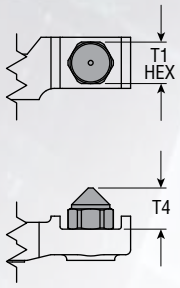

FIGURE A:
SINGLE CONE POINT

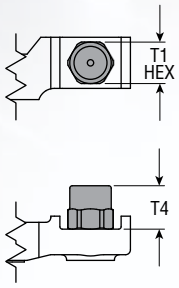

FIGURE B:
SINGLE SOCKET

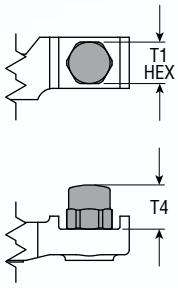

FIGURE C:
SINGLE BALL

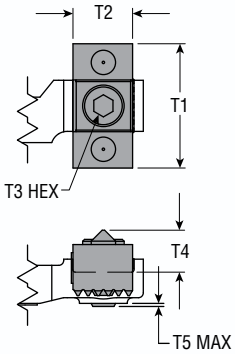

FIGURE D:
DOUBLE CONE POINT

	MODEL NUMBER OR ACCESSORY CODE	FIGURE	TIP COLOR	SIZE	KIT NUMBER	LETTER DIMENSION									
						T1		T2		T3		T4		T5	
						in	mm	in	mm	in	mm	in	mm	in	mm
SINGLE POINT TIPS	SCB	A	Black	1 & 2	GRM2-SCB-1	0.511	13.0	-	-	-	-	0.545	13.8	0.084	2.1
				2xH	62148-37	0.511	13.0	-	-	-	-	0.992	25.2	0.035	0.9
				4	GRM4-SCB-1	0.511	13.0	-	-	-	-	0.804	20.4	0.025	0.6
				4xH	62148-33	0.511	13.0	-	-	-	-	1.344	34.1	0.025	0.6
	SCS	A	Silver	1 & 2	GRM2-SCS-1	0.511	13.0	-	-	-	-	0.520	13.2	0.084	2.1
				2xH	62148-38	0.511	13.0	-	-	-	-	0.967	24.6	0.035	0.9
				4	GRM4-SCS-1	0.511	13.0	-	-	-	-	0.779	19.8	0.025	0.6
				4xH	62148-34	0.511	13.0	-	-	-	-	1.319	33.5	0.025	0.6
	SCG	A	Gold	1 & 2	GRM2-SCG-1	0.511	13.0	-	-	-	-	0.507	12.9	0.084	2.1
				2xH	62148-39	0.511	13.0	-	-	-	-	0.954	24.2	0.035	0.9
				4	GRM4-SCG-1	0.511	13.0	-	-	-	-	0.766	19.5	0.025	0.6
				4xH	62148-36	0.511	13.0	-	-	-	-	1.306	33.2	0.025	0.6
	SCR	A	Red	2	GRM2-SCR-1	0.511	13.0	-	-	-	-	0.497	12.6	0.035	0.9
				2xH	62148-47	0.511	13.0	-	-	-	-	0.944	24.0	0.035	0.9
	-Tx005	B	Black	1 & 2	65100-13	0.511	13.0	-	-	-	-	0.535	13.6	0.084	2.1
				4	65100-19	0.511	13.0	-	-	-	-	0.794	20.2	0.025	0.6
	-Tx006	B	Silver	1 & 2	65100-14	0.511	13.0	-	-	-	-	0.510	13.0	0.084	2.1
				4	65100-20	0.511	13.0	-	-	-	-	0.769	19.5	0.025	0.6
	-Tx007	B	Gold	1 & 2	65100-15	0.511	13.0	-	-	-	-	0.497	12.6	0.084	2.1
				4	65100-21	0.511	13.0	-	-	-	-	0.756	19.2	0.025	0.6
	-Tx008	C	Black	1 & 2	65100-16	0.511	13.0	-	-	-	-	0.545	13.8	0.084	2.1
				4	65100-22	0.511	13.0	-	-	-	-	0.804	20.4	0.025	0.6
	-Tx009	C	Silver	1 & 2	65100-17	0.511	13.0	-	-	-	-	0.520	13.2	0.084	2.1
				4	65100-23	0.511	13.0	-	-	-	-	0.779	19.8	0.025	0.6
	-Tx010	C	Gold	1 & 2	65100-18	0.511	13.0	-	-	-	-	0.507	12.9	0.084	2.1
				4	65100-24	0.511	13.0	-	-	-	-	0.766	19.5	0.025	0.6
	-Tx019	A	Black	1 & 2	65131-09	0.511	13.0	-	-	-	-	0.565	14.4	0.084	2.1
				4	65131-12	0.511	13.0	-	-	-	-	0.824	20.9	0.025	0.6
	-Tx020	A	Silver	1 & 2	65131-10	0.511	13.0	-	-	-	-	0.540	13.7	0.084	2.1
				4	65131-13	0.511	13.0	-	-	-	-	0.799	20.3	0.025	0.6
	-Tx021	A	Gold	1 & 2	65131-11	0.511	13.0	-	-	-	-	0.527	13.4	0.084	2.1
				4	65131-14	0.511	13.0	-	-	-	-	0.786	20.0	0.025	0.6
DOUBLE POINT TIPS	DCB	D	Black	1 & 2	GRM2-DCB-1	1.530	38.9	0.750	19.1	0.197	5.0	0.555	14.1	0.050	1.3
				4	GRM4-DCB-1	1.850	47.0	0.750	19.1	0.197	5.0	0.804	20.4	-	-
	DCS	D	Silver	1 & 2	GRM2-DCS-1	1.530	38.9	0.750	19.1	0.197	5.0	0.530	13.5	0.100	2.5
				4	GRM4-DCS-1	1.850	47.0	0.750	19.1	0.197	5.0	0.779	19.8	0.025	0.6
	DCG	D	Gold	1 & 2	GRM2-DCG-1	1.530	38.9	0.750	19.1	0.197	5.0	0.517	13.1	0.126	3.2
				4	GRM4-DCG-1	1.850	47.0	0.750	19.1	0.197	5.0	0.766	19.5	0.051	1.3
	DCR	D	Red	2	GRM2-DCR-1	1.530	38.9	0.750	19.1	0.197	5.0	0.507	12.9	0.098	2.5
	-Tx063	D	Black	1 & 2	71231-03	1.530	38.9	0.750	19.1	0.197	5.0	0.555	14.1	0.050	1.3
	-Tx064	D	Silver	1 & 2	71231-04	1.530	38.9	0.750	19.1	0.197	5.0	0.530	13.5	0.100	2.5
	-Tx065	D	Gold	1 & 2	71231-05	1.530	38.9	0.750	19.1	0.197	5.0	0.517	13.1	0.126	3.2
	-Tx188	D	Black	1 & 2	62148-52	1.530	38.9	0.750	19.1	0.197	5.0	0.555	14.1	0.050	1.3
				4	62148-60	1.850	47.0	0.750	19.1	0.197	5.0	0.804	20.4	-	-
	-Tx189	D	Silver	1 & 2	62148-53	1.530	38.9	0.750	19.1	0.197	5.0	0.530	13.5	0.100	2.5
				4	62148-61	1.850	47.0	0.750	19.1	0.197	5.0	0.779	19.8	0.025	0.6
	-Tx190	D	Gold	1 & 2	62148-54	1.530	38.9	0.750	19.1	0.197	5.0	0.517	13.1	0.126	3.2
				4	62148-62	1.850	47.0	0.750	19.1	0.197	5.0	0.766	19.5	0.051	1.3
	-Tx191	D	Red	2	62148-55	1.530	38.9	0.750	19.1	0.197	5.0	0.507	12.9	0.098	2.5

All dimensions are reference only unless specifically toleranced.

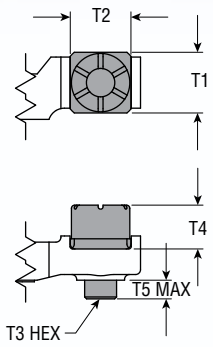

FIGURE E:
SINGLE URETHANE

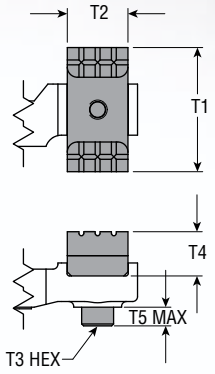

FIGURE F:
DOUBLE URETHANE

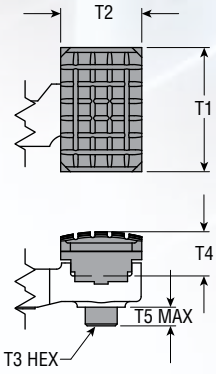

FIGURE G:
ROUNDED HARD URETHANE

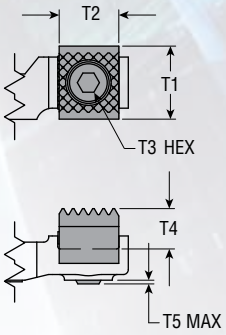

FIGURE H:
SINGLE DIAMOND POINT

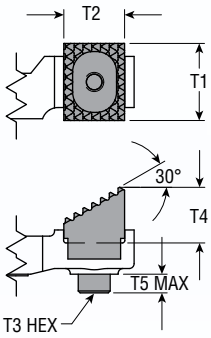

FIGURE I:
30° SINGLE DIAMOND POINT (UPWARD) (JAW B SHOWN)

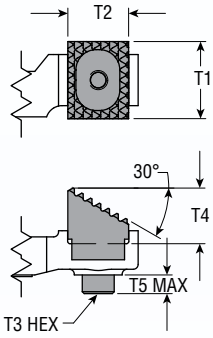

FIGURE J:
30° SINGLE DIAMOND POINT (DOWNWARD) (JAW B SHOWN)

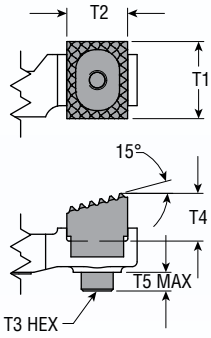

FIGURE K:
15° SINGLE DIAMOND POINT (UPWARD) (JAW B SHOWN)

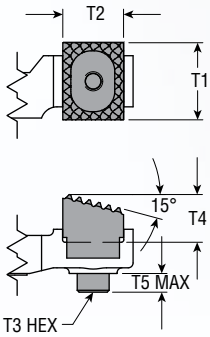

FIGURE L:
15° SINGLE DIAMOND POINT (DOWNWARD) (JAW B SHOWN)

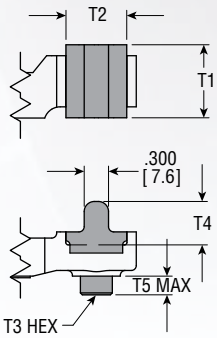

FIGURE M:
SINGLE DRAWBEAD (SHORT)

	MODEL NUMBER OR ACCESSORY CODE	FIGURE	TIP COLOR	SIZE	KIT NUMBER	LETTER DIMENSION									
						T1		T2		T3		T4		T5	
						in	mm	in	mm	in	mm	in	mm	in	mm
URETHANE PADS	SUB	E	Black	1 & 2	GRM2-SUB-1	0.748	19.0	0.748	19.0	0.197	5.0	0.540	13.7	0.236	6.0
				4	GRM4-SUB-1	0.748	19.0	0.748	19.0	0.197	5.0	0.800	20.3	0.236	6.0
	-Tx040	E	Red	1 & 2	65163-03	0.748	19.0	0.748	19.0	0.197	5.0	0.540	13.7	0.236	6.0
				4	65163-05	0.748	19.0	0.748	19.0	0.197	5.0	0.800	20.3	0.236	6.0
	-Tx066	E	Blue	1 & 2	65163-07	0.748	19.0	0.748	19.0	0.197	5.0	0.540	13.7	0.236	6.0
	DUB	F	Black	1 & 2	GRM2-DUB-1	1.530	38.9	0.748	19.0	0.197	5.0	0.545	13.8	0.236	6.0
				4	GRM4-DUB-1	1.850	47.0	0.748	19.0	0.197	5.0	0.794	20.2	0.236	6.0
	-Tx041	F	Red	1 & 2	65163-04	1.530	38.9	0.748	19.0	0.197	5.0	0.545	13.8	0.236	6.0
				4	65163-06	1.850	47.0	0.748	19.0	0.197	5.0	0.794	20.2	0.236	6.0
	-Tx067	F	Blue	1 & 2	65163-08	1.530	38.9	0.748	19.0	0.197	5.0	0.545	13.8	0.236	6.0
	-Tx068	G	Blue	1 & 2	65174-05	1.530	38.9	1.000	25.4	0.197	5.0	0.545	13.8	0.236	6.0
	-Tx069	G	Yellow	1 & 2	65174-08	1.530	38.9	1.000	25.4	0.197	5.0	0.565	14.4	0.236	6.0
SINGLE PAD TIPS	SDB	H	Black	1 & 2	GRM2-SDB-1	0.900	22.9	0.750	19.1	0.197	5.0	0.535	13.6	0.096	2.4
				4	GRM4-SDB-1	0.984	25.0	0.750	19.1	0.197	5.0	0.794	20.2	-	-
	SDS	H	Silver	1 & 2	GRM2-SDS-1	0.900	22.9	0.750	19.1	0.197	5.0	0.510	13.0	0.121	3.1
				4	GRM4-SDS-1	0.984	25.0	0.750	19.1	0.197	5.0	0.769	19.5	-	-
	SDG	H	Gold	1 & 2	GRM2-SDG-1	0.900	22.9	0.750	19.1	0.197	5.0	0.497	12.6	0.134	3.4
				4	GRM4-SDG-1	0.984	25.0	0.750	19.1	0.197	5.0	0.756	19.2	-	-
	SDR	H	Red	2	GRM2-SDR-1	0.900	22.9	0.750	19.1	0.197	5.0	0.487	12.4	0.096	2.4
	-Tx001	I	Black	1 & 2	65106-01	0.950	24.1	0.750	19.1	0.197	5.0	0.715	18.2	0.236	6.0
	-Tx002	I	Silver	1 & 2	65106-02	0.950	24.1	0.750	19.1	0.197	5.0	0.686	17.4	0.236	6.0
	-Tx003	J	Black	1 & 2	65106-01	0.950	24.1	0.750	19.1	0.197	5.0	0.715	18.2	0.236	6.0
	-Tx004	J	Silver	1 & 2	65106-02	0.950	24.1	0.750	19.1	0.197	5.0	0.686	17.4	0.236	6.0
	-Tx071	K	Black	1 & 2	71229-03	0.950	24.1	0.750	19.1	0.197	5.0	0.614	15.6	0.236	6.0
	-Tx072	K	Silver	1 & 2	71229-04	0.950	24.1	0.750	19.1	0.197	5.0	0.588	14.9	0.236	6.0
	-Tx074	L	Black	1 & 2	71229-03	0.950	24.1	0.750	19.1	0.197	5.0	0.614	15.6	0.236	6.0
	-Tx075	L	Silver	1 & 2	71229-04	0.950	24.1	0.750	19.1	0.197	5.0	0.588	14.9	0.236	6.0
	-Tx083	M	Black	1 & 2	75646-03	0.900	22.9	0.750	19.1	0.197	5.0	0.535	13.6	0.236	6.0
	-Tx180	H	Black	1 & 2	62148-46	0.900	22.9	0.750	19.1	0.197	5.0	0.535	13.6	0.096	2.4
				4	62148-57	0.984	25.0	0.750	19.1	0.197	5.0	0.794	20.2	-	-
	-Tx181	H	Silver	1 & 2	62148-44	0.900	22.9	0.750	19.1	0.197	5.0	0.510	13.0	0.121	3.1
				4	62148-58	0.984	25.0	0.750	19.1	0.197	5.0	0.769	19.5	-	-
	-Tx182	H	Gold	1 & 2	62148-45	0.900	22.9	0.750	19.1	0.197	5.0	0.497	12.6	0.134	3.4
				4	62148-59	0.984	25.0	0.750	19.1	0.197	5.0	0.756	19.2	-	-
	-Tx183	H	Red	2	62148-56	0.900	22.9	0.750	19.1	0.197	5.0	0.487	12.4	0.096	2.4

All dimensions are reference only unless specifically toleranced.

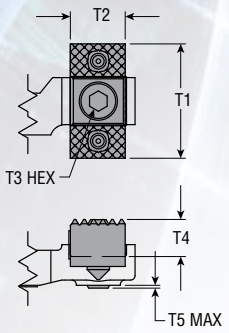

FIGURE N:
DOUBLE DIAMOND POINT

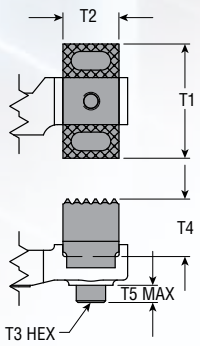

FIGURE P:
OFFSET DOUBLE DIAMOND POINT (LONG)

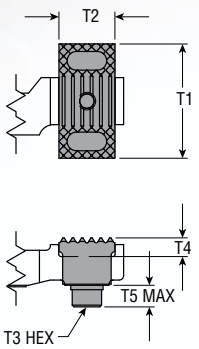

FIGURE Q:
OFFSET DOUBLE DIAMOND POINT (SHORT)

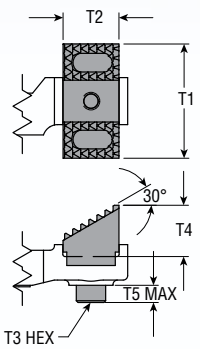

FIGURE R:
30° DOUBLE DIAMOND POINT (UPWARD) (JAW B SHOWN)

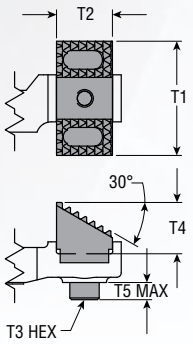

FIGURE S:
30° DOUBLE DIAMOND POINT (DOWNWARD) (JAW B SHOWN)

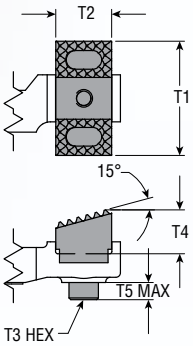

FIGURE T:
15° DOUBLE DIAMOND POINT (UPWARD) (JAW B SHOWN)

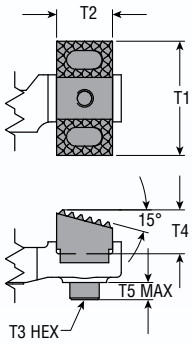

FIGURE U:
15° DOUBLE DIAMOND POINT (DOWNWARD) (JAW B SHOWN)

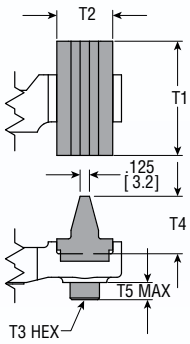

FIGURE V:
DOUBLE DRAWBEAD (TALL)

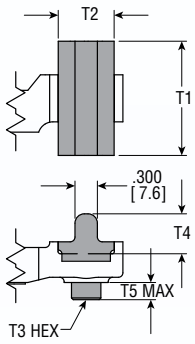

FIGURE W:
DOUBLE DRAWBEAD (SHORT)

	MODEL NUMBER OR ACCESSORY CODE	FIGURE	TIP COLOR	SIZE	KIT NUMBER	LETTER DIMENSION									
						T1		T2		T3		T4		T5	
						in	mm	in	mm	in	mm	in	mm	in	mm
DOUBLE PAD TIPS	DDB	N	Black	1 & 2	GRM2-DDB-1	1.530	38.9	0.750	19.1	0.197	5.0	0.535	13.6	0.050	1.3
				4	GRM4-DDB-1	1.850	47.0	0.750	19.1	0.197	5.0	0.794	20.2	-	-
	DDS	N	Silver	1 & 2	GRM2-DDS-1	1.530	38.9	0.750	19.1	0.197	5.0	0.510	13.0	0.100	2.5
				4	GRM4-DDS-1	1.850	47.0	0.750	19.1	0.197	5.0	0.769	19.5	0.025	0.6
	DDG	N	Gold	1 & 2	GRM2-DDG-1	1.530	38.9	0.750	19.1	0.197	5.0	0.497	12.6	0.126	3.2
				4	GRM4-DDG-1	1.850	47.0	0.750	19.1	0.197	5.0	0.756	19.2	0.051	1.3
	DDR	N	Red	2	GRM2-DDR-1	1.530	38.9	0.750	19.1	0.197	5.0	0.487	12.4	0.098	2.5
	-Tx030	Q	Black	1 & 2	65405-06	1.530	38.9	0.750	19.1	0.197	5.0	0.250	6.4	0.295	7.5
	-Tx031	P	Black	1 & 2	65405-03	1.530	38.9	0.750	19.1	0.197	5.0	0.820	20.8	0.236	6.0
	-Tx032	P	Silver	1 & 2	65405-04	1.530	38.9	0.750	19.1	0.197	5.0	0.770	19.6	0.236	6.0
	-Tx033	P	Gold	1 & 2	65405-05	1.530	38.9	0.750	19.1	0.197	5.0	0.744	18.9	0.236	6.0
	-Tx034	R	Black	1 & 2	65149-03	1.530	38.9	0.750	19.1	0.197	5.0	0.715	18.2	0.236	6.0
	-Tx035	R	Silver	1 & 2	65149-04	1.530	38.9	0.750	19.1	0.197	5.0	0.686	17.4	0.236	6.0
	-Tx036	R	Gold	1 & 2	65149-05	1.530	38.9	0.750	19.1	0.197	5.0	0.658	16.7	0.236	6.0
	-Tx037	S	Black	1 & 2	65149-03	1.530	38.9	0.750	19.1	0.197	5.0	0.715	18.2	0.236	6.0
	-Tx038	S	Silver	1 & 2	65149-04	1.530	38.9	0.750	19.1	0.197	5.0	0.686	17.4	0.236	6.0
	-Tx039	S	Gold	1 & 2	65149-05	1.530	38.9	0.750	19.1	0.197	5.0	0.658	16.7	0.236	6.0
	-Tx077	T	Black	1 & 2	71229-06	1.530	38.9	0.750	19.1	0.197	5.0	0.614	15.6	0.236	6.0
	-Tx078	T	Silver	1 & 2	71229-07	1.530	38.9	0.750	19.1	0.197	5.0	0.588	14.9	0.236	6.0
	-Tx079	T	Gold	1 & 2	71229-08	1.530	38.9	0.750	19.1	0.197	5.0	0.563	14.3	0.236	6.0
	-Tx080	U	Black	1 & 2	71229-06	1.530	38.9	0.750	19.1	0.197	5.0	0.614	15.6	0.236	6.0
	-Tx081	U	Silver	1 & 2	71229-07	1.530	38.9	0.750	19.1	0.197	5.0	0.588	14.9	0.236	6.0
	-Tx082	U	Gold	1 & 2	71229-08	1.530	38.9	0.750	19.1	0.197	5.0	0.563	14.3	0.236	6.0
	-Tx060	V	Black	1 & 2	65171-03	1.530	38.9	0.750	19.1	0.197	5.0	0.820	20.8	0.236	6.0
	-Tx061	V	Silver	1 & 2	65171-04	1.530	38.9	0.750	19.1	0.197	5.0	0.770	19.6	0.236	6.0
	-Tx084	W	Black	1 & 2	75646-04	1.530	38.9	0.750	19.1	0.197	5.0	0.535	13.6	0.236	6.0
	-Tx184	N	Black	1 & 2	62148-52	1.530	38.9	0.750	19.1	0.197	5.0	0.535	13.6	0.050	1.3
				4	62148-60	1.850	47.0	0.750	19.1	0.197	5.0	0.794	20.2	-	-
	-Tx185	N	Silver	1 & 2	62148-53	1.530	38.9	0.750	19.1	0.197	5.0	0.510	13.0	0.100	2.5
				4	62148-61	1.850	47.0	0.750	19.1	0.197	5.0	0.769	19.5	0.025	0.6
	-Tx186	N	Gold	1 & 2	62148-54	1.530	38.9	0.750	19.1	0.197	5.0	0.497	12.6	0.126	3.2
				4	62148-62	1.850	47.0	0.750	19.1	0.197	5.0	0.756	19.2	0.051	1.3
	-Tx187	N	Red	2	62148-55	1.530	38.9	0.750	19.1	0.197	5.0	0.487	12.4	0.098	2.5

NOTE: 1) 65405-xx INDICATES Tx030 TIP OPTION IS ALSO INCLUDED IN KIT.

All dimensions are reference only unless specifically toleranced.

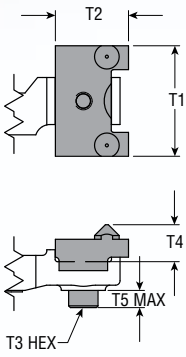

FIGURE X:
DOUBLE CONE POINT
(USE WITH SWITCH MOUNTING)

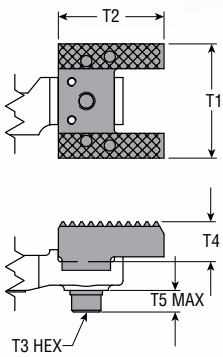

FIGURE Y:
DOUBLE DIAMOND POINT
(SWITCH MOUNTING)

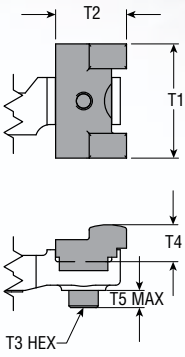

FIGURE Z:
DOUBLE NO SCRATCH
(USE WITH SWITCH MOUNTING)

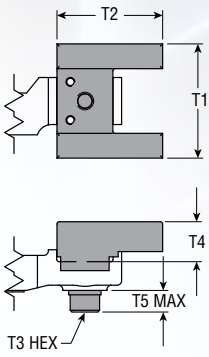

FIGURE AA:
DOUBLE NO SCRATCH
(SWITCH MOUNTING)

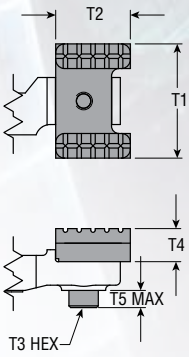

FIGURE BB:
DOUBLE URETHANE
(USE WITH SWITCH MOUNTING)

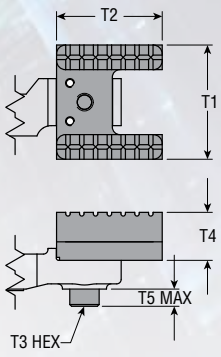

FIGURE CC:
DOUBLE URETHANE
(SWITCH MOUNTING)

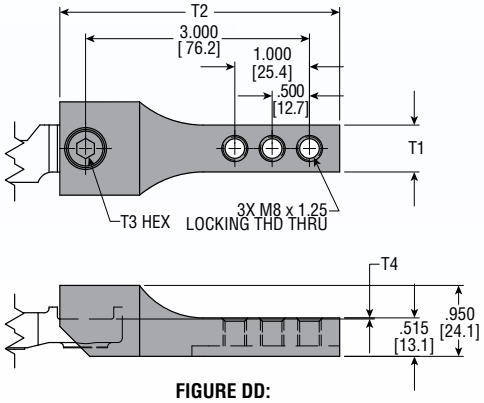

FIGURE DD:
DUCKBILL TIP EXTENSION

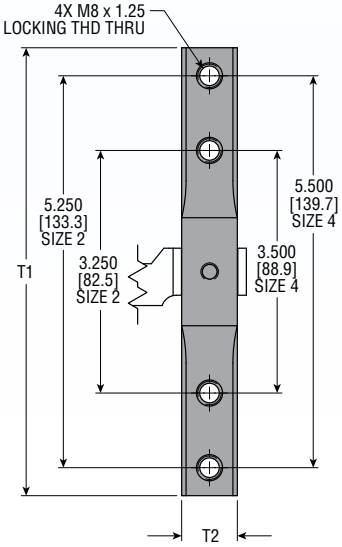

FIGURE EE:
WING TIP EXTENSION

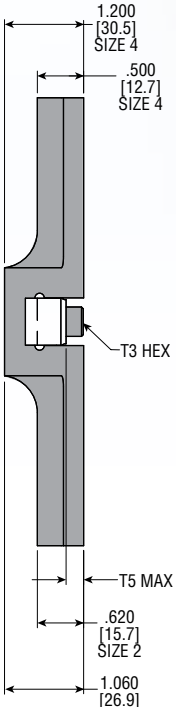

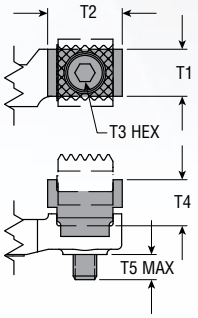

FIGURE FF:
TIP EXTENSION
(JAW STYLES H & J ONLY)

	MODEL NUMBER OR ACCESSORY CODE	FIGURE	TIP COLOR	SIZE	KIT NUMBER	LETTER DIMENSION									
						T1		T2		T3		T4		T5	
						in	mm	in	mm	in	mm	in	mm	in	mm
DOUBLE PAD TIPS (SWITCH MOUNTING)	-Tx022	X	Black	2	65136-04	1.480	37.6	0.980	24.9	0.197	5.0	0.520	13.2	0.236	6.0
	-Tx023	X	Silver	2	65136-05	1.480	37.6	0.980	24.9	0.197	5.0	0.495	12.6	0.236	6.0
	-Tx024	X	Gold	2	65136-06	1.480	37.6	0.980	24.9	0.197	5.0	0.482	12.2	0.236	6.0
	-Tx025	Y	Black	2	65136-07	1.530	38.9	1.416	36.0	0.197	5.0	0.560	14.2	0.295	7.5
	-Tx026	Y	Silver	2	65136-08	1.530	38.9	1.416	36.0	0.197	5.0	0.535	13.6	0.295	7.5
	-Tx027	Y	Gold	2	65136-09	1.530	38.9	1.416	36.0	0.197	5.0	0.522	13.3	0.295	7.5
	-Tx042	Z	Black	2	65151-04	1.530	38.9	0.950	24.1	0.197	5.0	0.520	13.2	0.236	6.0
	-Tx043	Z	Silver	2	65151-05	1.530	38.9	0.950	24.1	0.197	5.0	0.495	12.6	0.236	6.0
	-Tx044	Z	Gold	2	65151-06	1.530	38.9	0.950	24.1	0.197	5.0	0.470	11.9	0.236	6.0
	-Tx045	AA	Black	2	65151-07	1.530	38.9	1.416	36.0	0.197	5.0	0.560	14.2	0.295	7.5
	-Tx046	AA	Silver	2	65151-08	1.530	38.9	1.416	36.0	0.197	5.0	0.535	13.6	0.295	7.5
	-Tx047	AA	Gold	2	65151-09	1.530	38.9	1.416	36.0	0.197	5.0	0.510	13.0	0.295	7.5
	-Tx052	BB	Red	2	65150-04	1.530	38.9	1.000	25.4	0.197	5.0	0.443	11.3	0.236	6.0
	-Tx055	CC	Red	2	65150-05	1.530	38.9	1.416	36.0	0.197	5.0	0.643	16.3	0.236	6.0
TIP EXT.	-Tx017	DD	Brown	2	65133-03	0.628	16.0	3.750	95.3	0.197	5.0	0.015	0.4	0.045	1.1
	-Tx018	EE	Brown	2	65134-03	6.000	152.4	0.746	18.9	0.197	5.0	-	-	0.265	6.7
				4	65134-04	6.500	165.1	1.125	28.6	0.197	5.0	-	-	0.135	3.4
	H & J TIP EXT.	FF	-	2	62148-40	0.750	19.1	1.000	25.4	0.197	5.0	0.617	15.7	0.394	10.0
				4	62148-35	1.000	25.4	1.000	25.4	0.197	5.0	0.700	17.8	0.107	2.7

All dimensions are reference only unless specifically toleranced.

Step 7 - Port Fittings

The Series GRM Clamp is available with two standard port thread sizes: 1/8-27 NPT and 1/8-28 BSPP. Selection of the design number in Step 5 determines the port thread size and refines the subsequent port fitting selection. The Design 2 designation provides a clamp equipped with imperial port threads (NPT). The Design 6 designation provides a clamp equipped with metric port threads (BSPP). Use the following questions in this section to help in your selection process. If you are unable to identify the port fittings that suit your application needs, contact your local distributor or a member of PHD for assistance.

1) What is the O.D. size of the air line you will be connecting to the clamp?

a. Ø 1/4" – Design 2 with LAA or LBB port fitting options

b. Ø 6mm – Design 6 with LAA or LBB port fitting options

c. Ø 8mm – Design 6 with LCC port fitting option

2) Do you require metal or plastic port fittings?

a. Metal – LAA or LCC

b. Plastic – LBB

3) Do you require port threads in a different location than those shown on the adjacent page?

a. Yes – Consider B08, B09, B14, B15, or B16 options located in the Accessory Options section

b. No – Standard unit with Imperial or Metric port threads applies

PHD has produced many variations of Series GRM Clamp bodies to satisfy specific customer requirements. Here are a couple of examples showing alternate port and fitting locations:

A	Port threads and metal fittings are moved from the side of the clamp to the sides of the rear mounting flange (B06 option).
B	Oversized bore with ports and metal fittings moved to the rear of the clamp (B08A option).

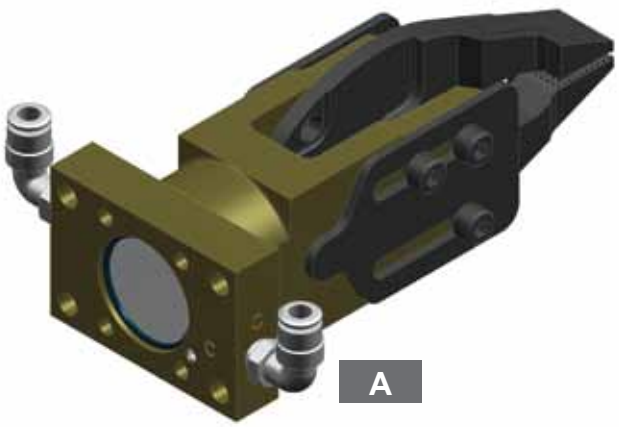

A

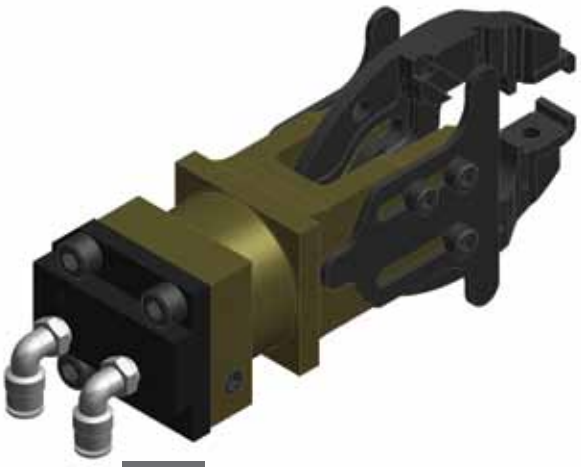

B

LAA OPTION - 90° Swivel Elbow, Metal Fittings for 1/4" or 6 mm Tubing

LBB OPTION - 90° Swivel Elbow, Plastic Fittings for 1/4" or 6 mm Tubing

LCC OPTION - 90° Swivel Elbow, Metal Fittings for 8 mm Tubing

SIZE 1

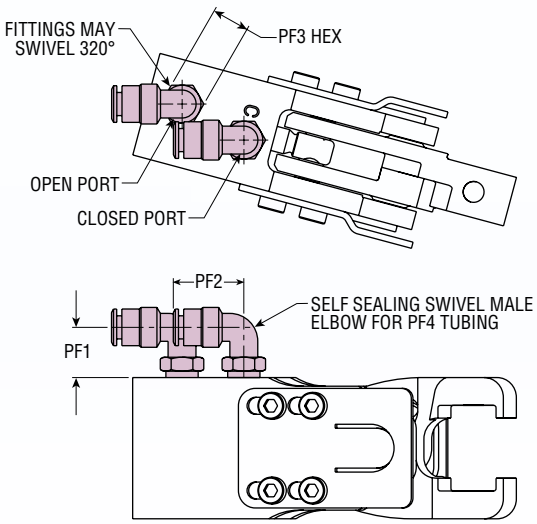

LETTER DIMENSION		PORT FITTING OPTION in	PORT FITTING OPTION mm
PF1 (MIN)		0.630	16.0
PF1 (MAX)		0.748	19.0
PF2		0.886	22.5
PF3	-LAA	0.472	12.0
	-LBB	0.437	11.1
	-LCC	0.472	12.0
PF4	-LAA	1/4	6.0
	-LBB	1/4	6.0
	-LCC	—	8.0

FITTING PART NUMBERS IF ORDERED SEPARATELY

PORT FITTING OPTION	PORTS IMPERIAL	PORTS METRIC
LAA	62178-003	62195-005
LBB	71120-001	71121-001
LCC	—	62195-007

SIZE 2

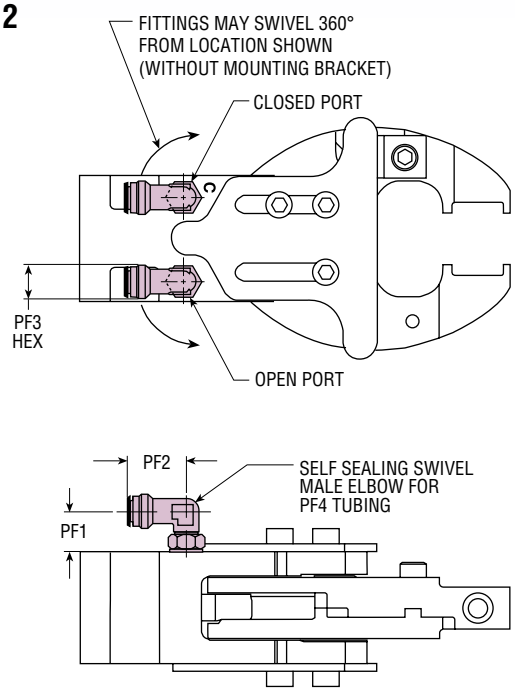

SIZE 4

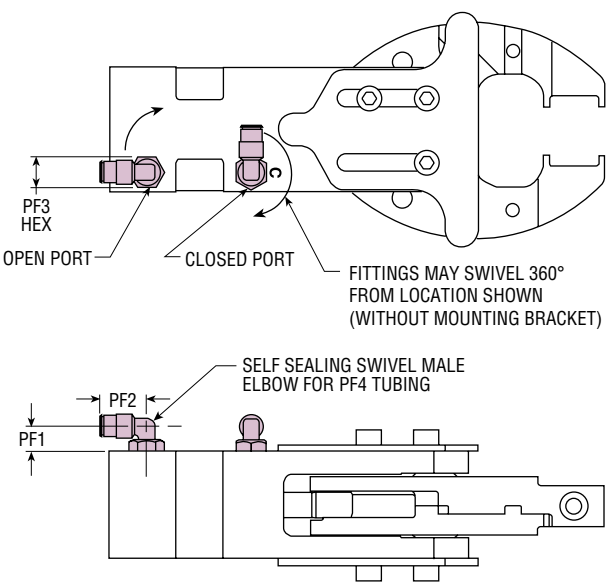

NOTES:
1) CLOSED PORTS ARE MARKED WITH THE LETTER C.
2) -LCC PORT FITTING OPTION ONLY AVAILABLE ON DESIGN 6 CLAMPS.

Step 8 - Accessory Options

PHD offers a wide variety of accessories (accessory options) for the Series GRM Clamp. From larger bore body options (B08 option) that increase grip force to switch options that detect part present (Pxxxx option) and double sheet conditions (Dxxxx option), PHD's Series GRM Clamp has the right solution for your specific application needs. Use the information provided with each option to identify: specifications, compatibility with other options, ordering data, and replacement parts/kits if ordered separately. If you are unable to locate the option that suits your application needs or unsure about your selection, contact your local distributor or a member of PHD for assistance.

BASE CLAMP NUMBER

GRM 2 T S - 2 - 45 - 45 - LAA - **ACCESSORY OPTIONS**

See expanded diagram below.

- Bxx - Gxx - JBxx - Mxx - Sxx - Pxxxx

Bxx	Gxx	JBxx	Mxx	Sxx	Pxxxx
BODY OPTIONS	GENERAL OPTIONS (Miscellaneous)	JAW OPTIONS - JAW B	MOUNTING OPTIONS	SWITCH OPTIONS (specific switch)	SWITCH MOUNTING OPTIONS

Refer to Mounting section.

LEGEND FOR ACCESSORY OPTIONS' EXAMPLE ORDERING DATA :

Gray codes are base clamp model.	Green codes are required for this option.	White codes will normally be ordered.

Example Ordering Data:

GRM 2 T S - 2 - 45 blank - 45 blank - LAA - S01 - TA022 - TB025

Consult PHD, Inc. for available options/accessories or visit our website:

www.phdinc.com/grm

- Dxxxx - Kxxxx - PA(B)xxx - TAxxx - TBxxx - Vx

SWITCH MOUNTING OPTIONS | SWITCH MOUNTING OPTIONS | SWITCH MOUNTING OPTIONS | TIP OPTIONS - JAW A | TIP OPTIONS - JAW B | SEAL OPTIONS

Refer to Tips section.

B04 LARGER PORT ORIFICES

- Option improves cycle time. See Specifications table.
- Available on: Size 2
  Jaw Styles S, C, D, F, H, J, K, N, P, R

Example Ordering Data:

GRM 2 T S - 2 - 45 DCB - 45 DDB - LAA - B04

SPECIFICATIONS

CLAMP SIZE	WEIGHT ADDER		CYCLE TIME OPEN OR CLOSE(1)
	lb	kg	sec
2	0.00	0.00	0.08

NOTE: 1) Based on 87 psi [6 bar] air pressure.

PART NUMBERS IF ORDERED SEPARATELY

CLAMP SIZE & JAW STYLE	PORT THREADS	
	IMPERIAL	METRIC
2xS, C, D, H, J, N, P, R	65312-11	65312-12
2xF, K	65314-11	65314-12

B08 HIGH FORCE CLAMP "2 X 4"

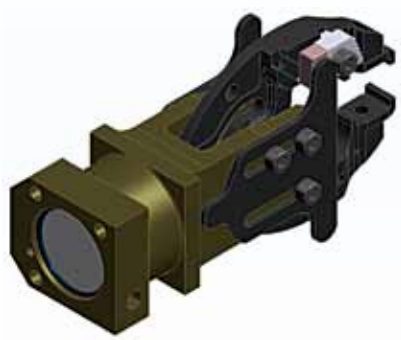

- Option provides more grip force. See Specifications table.
- Cylinder portion of clamp body utilizes larger cylinder and requires GRM4 mounting bracketry.
- Jaw portion of clamp utilizes GRM2 jaws and requires GRM2 tips.
- Available on: Size 2
  Jaw Styles S, C, D, F, G, H, J, K, N, P, R

Example Ordering Data:

GRM 2 T S - 2 - 45 DCB - 45 DDB - LAA - B08

SPECIFICATIONS

CLAMP SIZE & JAW STYLE	TOTAL GRIP FORCE(1)		ENVELOPE SIZE ADDER						WEIGHT ADDER		DISPLACEMENT			
			LENGTH		WIDTH		HEIGHT				OPEN		CLOSE	
	lb	N	in	mm	in	mm	in	mm	lb	kg	in³	cm³	in³	cm³
2xS, C, D, F, G, H, J, N, P	460	2046	0.846	21.5	0.171	4.3	0.000	0.0	0.45	0.20	1.95	32.0	1.83	30.0
2xF	460	2046												
2xK	360	1601												
2xR	676	3007												

NOTES:
1) Based on 87 psi [6 bar] air pressure.
2) For tips, use GRM2 weights, dimensions, and kit numbers.
3) For mounting brackets, use GRM4 weights, dimensions, and kit numbers.

PART NUMBERS IF ORDERED SEPARATELY

CLAMP SIZE & JAW STYLE	PORT THREADS	
	IMPERIAL	METRIC
2xS, C, D, G, H, J, N, P, R	65344-11	65344-12
2xF, K	65345-11	65345-12

B09 POSITION 2 PORTS

- Option provides both ports in position 2 of clamp (jaw A side of clamp).
- Available on: Size 2
  Jaw Styles S, C, D, F, G, H, J, K, N, P, R

Example Ordering Data:

GRM 2 T S - 2 - 45 DCB - 45 DDB - LAA - B09

SPECIFICATIONS

CLAMP SIZE	WEIGHT ADDER	
	lb	kg
2	0.00	0.00

PART NUMBERS IF ORDERED SEPARATELY

CLAMP SIZE & JAW STYLE	PORT THREADS	
	IMPERIAL	METRIC
2xS, C, D, G, H, J, N, P, R	65368-11	65368-12
2xF, K	79003-11	79003-12
2xL, M	79709-01	79709-02

All dimensions are reference only unless specifically toleranced.

(800) 624-8511
www.phdinc.com/grm

phd SOLUTIONS FOR INDUSTRIAL AUTOMATION

B10 TANDEM CYLINDER

- Option provides more grip force. See Specifications table.
- Tandem cylinder mounts to standard GRM4 body.
- Available on: Size 4
  Jaw Styles S, F, G, H, J

Example Ordering Data:

GRM 4 T S - 2 - 45 DCB - 45 DDB - LAA - B10

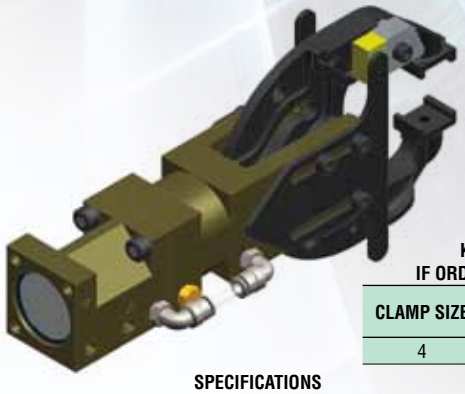

KIT NUMBERS IF ORDERED SEPARATELY

CLAMP SIZE	PORT THREADS	
	IMPERIAL	METRIC
4	79710-03	79710-04

Tubing to connect cylinders may interfere with side mounting brackets. Installing a longer tube between cylinders can eliminate this.

SPECIFICATIONS

CLAMP SIZE	TOTAL GRIP FORCE(1)		ENVELOPE SIZE ADDER						WEIGHT ADDER		DISPLACEMENT			
			LENGTH		WIDTH		HEIGHT				OPEN		CLOSE	
	lb	N	in	mm	in	mm	in	mm	lb	kg	in³	cm³	in³	cm³
4	875	3892	2.690	68.3	0.000	0.0	0.000	0.0	0.95	0.43	2.40	39.3	4.36	71.4

NOTE: 1) Based on 87 psi [6 bar] air pressure.

B11 SIDE MOUNT READY BODY

- Option provides body that accepts standard side mounts: C, R, S, W, and accessory mounts: M01, M07, M21, M22, M23, M25, M27, M28, M29, M30, M36, M37, M38, M39, M42, M46, and M47.
- Available on: Size 1
  Jaw Styles S, F

Example Ordering Data:

GRM 1 S S - 2 - 50 DCB - 50 DDB - LAA - B11

SPECIFICATIONS

CLAMP SIZE & JAW STYLE	ENVELOPE SIZE ADDER						WEIGHT ADDER	
	LENGTH		WIDTH		HEIGHT			
	in	mm	in	mm	in	mm	lb	kg
1xS	0.591	15.0	0.000	0.0	0.000	0.0	0.06	0.03
1xF							0.04	0.02

PART NUMBERS IF ORDERED SEPARATELY

CLAMP SIZE & JAW STYLE	PORT THREADS	
	IMPERIAL	METRIC
1xS	81663-005-00-11	81663-005-00-12
1xF	81663-005-04-11	81663-005-04-12

B12 RIGID FLANGE MOUNT – POSITION 1 PORTS

- Option provides a body with an integral flange that includes 4X 0.354 in [9.0 mm] thru holes and 2X 0.3161 in [8.029 mm] dowel pin holes.
- Available on: Size 2
  Jaw Styles S, C, D, F, G, H, J, K, N, P, R

Example Ordering Data:

GRM 2 T S - 2 - 45 DCB - 45 DDB - LAA - B12

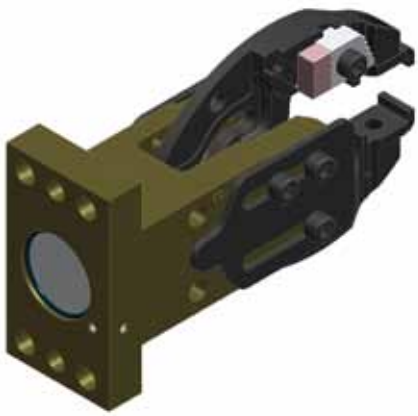

SPECIFICATIONS

CLAMP SIZE & JAW STYLE	ENVELOPE SIZE ADDER						WEIGHT ADDER	
	LENGTH		WIDTH		HEIGHT			
	in	mm	in	mm	in	mm	lb	kg
2xS, C, D, G, H, J, N, P, R	0.157	4.0	0.186	4.7	0.000	0.0	0.35	0.16
2xF or 2xK	0.157	4.0	0.231	5.9	0.000	0.0	0.39	0.18

PART NUMBERS IF ORDERED SEPARATELY

CLAMP SIZE	PORT THREADS	
	IMPERIAL	METRIC
2	78879-11	78879-12

All dimensions are reference only unless specifically toleranced.

B14 RIGID FLANGE MOUNT – POSITION 3 PORTS

- Option provides a body with an integral flange that includes 4X 0.354 in [9.0 mm] thru holes and 2X 0.3161 in [8.029 mm] dowel pin holes.
- Available on: Size 2
  Jaw Styles S, C, D, F, G, H, J, K, N, P, R

Example Ordering Data:

GRM 2 T S - 2 - 45 DCB - 45 DDB - LAA - B14

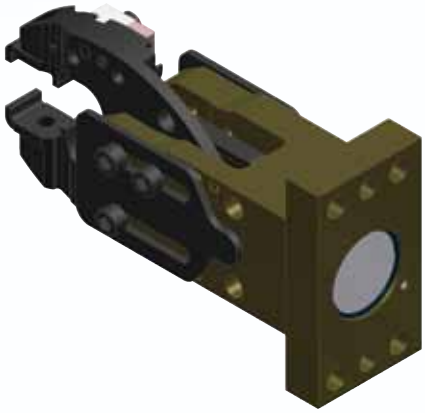

SPECIFICATIONS

CLAMP SIZE & JAW STYLE	ENVELOPE SIZE ADDER						WEIGHT ADDER	
	LENGTH		WIDTH		HEIGHT			
	in	mm	in	mm	in	mm	lb	kg
2xS, C, D, G, H, J, N, P, R	0.157	4.0	0.186	4.7	0.000	0.0	0.35	0.16
2xF or 2xK	0.157	4.0	0.231	5.9	0.000	0.0	0.39	0.18

PART NUMBERS IF ORDERED SEPARATELY

CLAMP SIZE	PORT THREADS	
	IMPERIAL	METRIC
2	78880-11	78880-12

B15 FLANGE BODY FOR POSITION 1 & 3 SWITCH MOUNTING – POSITION 2 PORTS

- Option provides a flange body with a completely flat side (position 1) allowing for switch mounting options.
- Both ports in position 2 of clamp (jaw A side of clamp).
- Available on: Size 2
  Jaw Styles S, C, D, F, G, H, J, K, N, P, R

Example Ordering Data:

GRM 2 T F - 2 - 85 DCB - 00 DDB - LAA - B15

SPECIFICATIONS

CLAMP SIZE & JAW STYLE	ENVELOPE SIZE ADDER						WEIGHT ADDER	
	LENGTH		WIDTH		HEIGHT			
	in	mm	in	mm	in	mm	lb	kg
2xS, C, D, G, H, J, N, P, R	0.000	0.0	0.189	4.8	0.000	0.0	0.08	0.03
2xF or 2xK	0.000	0.0	0.234	5.9	0.000	0.0	0.11	0.05

PART NUMBERS IF ORDERED SEPARATELY

CLAMP SIZE	PORT THREADS	
	IMPERIAL	METRIC
2	79003-11	79003-12

B16 RIGID FLANGE MOUNT – POSITION 2 PORTS

- Option provides a body with an integral flange that includes 4X 0.354 in [9.0 mm] thru holes and 2X 0.3161 in [8.029 mm] dowel pin holes.
- Available on: Size 2
  Jaw Styles S, C, D, F, G, H, J, K, N, P, R

Example Ordering Data:

GRM 2 T S - 2 - 45 DCB - 45 DDB - LAA - B16

SPECIFICATIONS

CLAMP SIZE & JAW STYLE	ENVELOPE SIZE ADDER						WEIGHT ADDER	
	LENGTH		WIDTH		HEIGHT			
	in	mm	in	mm	in	mm	lb	kg
2xS, C, D, G, H, J, N, P, R	0.157	4.0	0.186	4.7	0.000	0.0	0.35	0.16
2xF or 2xK	0.157	4.0	0.231	5.9	0.000	0.0	0.39	0.18

PART NUMBERS IF ORDERED SEPARATELY

CLAMP SIZE	PORT THREADS	
	IMPERIAL	METRIC
2	78898-11	78898-12

G01 G02 CONTINUITY SENSING

- Option provides continuity path through clamp for low voltage current. Current can be used as signal to controller to indicate part present by sensing high/low condition.
- Special pivot pin with M6 thread accepts electrical connector. Flanged locknut is provided to clamp connector against shoulder of pivot pin.
- Full impact plate adjustment is retained.
- No special tips, jaws, or switches required.
- Available on: Size 2
  Jaw Styles S, C, D, F*, G, H, J, K*, N, P, R
  * Option G02 not available for Jaw Styles F, K

Example Ordering Data:

GRM 2 T S - 2 - 45 DCB - 45 DDB - LAA - G01

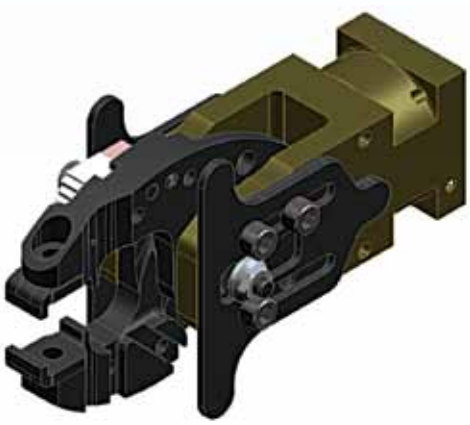

ACCESSORY CODE	M6 THREAD POSITION
G01	3 Opp Ports
G02	1 Port Side

Continuity feature does not work with urethane tips.
Clamp must be insulated where mounted.

SPECIFICATIONS

CLAMP SIZE	ENVELOPE SIZE ADDER						WEIGHT ADDER	
	LENGTH		WIDTH		HEIGHT			
	in	mm	in	mm	in	mm	lb	kg
2	0.000	0.0	0.229	5.8	0.000	0.0	0.11	0.05

KIT NUMBERS IF ORDERED SEPARATELY

CLAMP SIZE & JAW STYLE	IMPACT PLATE EARS	KIT NUMBER
2xS, C, D, G, H, J, N, P, R	0	65467-03
	1	65467-04
	2	65467-05
2xF	0	65467-13
	1	65467-06
	2	65467-14
2xK	1	65467-12

All dimensions are reference only unless specifically toleranced.

Is your high temp application too hot to handle?

Does lack of performance from your existing products burn you up?

Does downtime have you on the hot seat?

G11

High Temperature Option

- Option includes:
  - Replacement of urethane-based components with all metal components.
  - High temperature seals and lubrication rated to 392°F [200°C].
  - Ceramic coated tips that minimize thermal transfer from heat source to clamp.
- Customer must specify TA/TB option to receive high temperature tips.
- Contact PHD, Inc. directly for high temperature option on jaw styles L and M.
- Switches are not recommended over 158°F [70°C]. Switch warranty is not available.
- Available on all sizes:
  All Jaw Styles

G11 HIGH TEMPERATURE

Example Ordering Data:

GRM 2 T S - 2 - 45 - 45 - LAA - G11 - TA180 - TB180

- G11: GENERAL OPTIONS (MISCELLANEOUS)
- TA180: TIP OPTIONS - JAW A
- TB180: TIP OPTIONS - JAW B

SPECIFICATIONS

CLAMP SIZE	WEIGHT ADDER	
	lb	kg
1	0.00	0.00
2	0.04	0.02
4	0.15	0.07

SEAL KIT NUMBERS IF ORDERED SEPARATELY

CLAMP SIZE	KIT NUMBER
1	65498-08
2	65498-03
2-B08	65498-04
4	65498-05

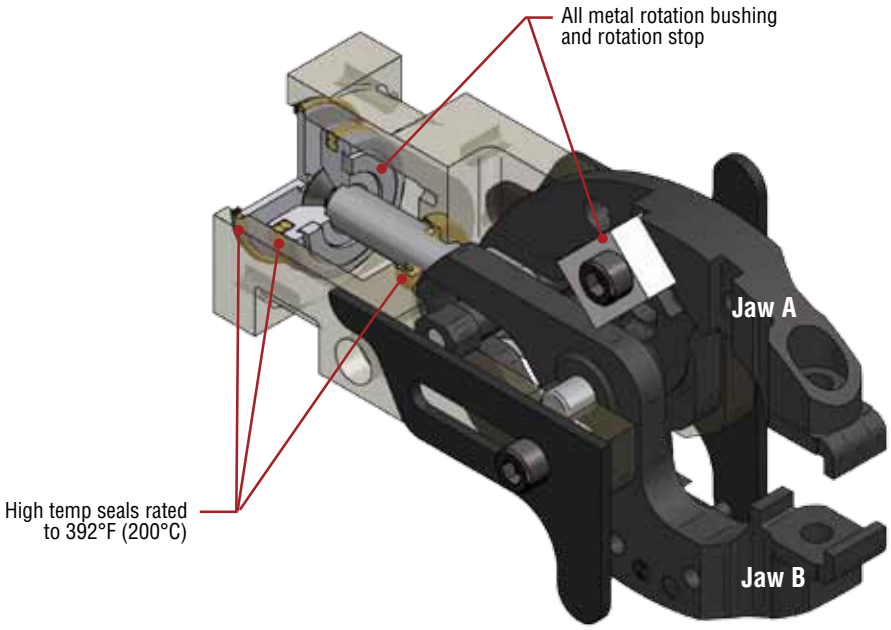

High temp lube throughout

NOTE:

1) All dimensions for these options are standard. Refer to Jaw Styles and Tips sections for dimensional information.

Tx180 to Tx191 HIGH TEMPERATURE CERAMIC COATED TIPS

ACCESSORY CODE	JAW TIP OPTION	TIP COLOR EQUIVALENT	AVAILABLE ON CLAMP SIZE
-Tx180	Single Diamond	Black	All
-Tx181	Single Diamond	Silver	All
-Tx182	Single Diamond	Gold	All
-Tx183	Single Diamond	Red	2
-Tx184	Double Diamond	Black	All
-Tx185	Double Diamond	Silver	All
-Tx186	Double Diamond	Gold	All
-Tx187	Double Diamond	Red	2
-Tx188	Double Cone	Black	All
-Tx189	Double Cone	Silver	All
-Tx190	Double Cone	Gold	All
-Tx191	Double Cone	Red	2

JB03x SWITCH MOUNTING JAW CLAMP

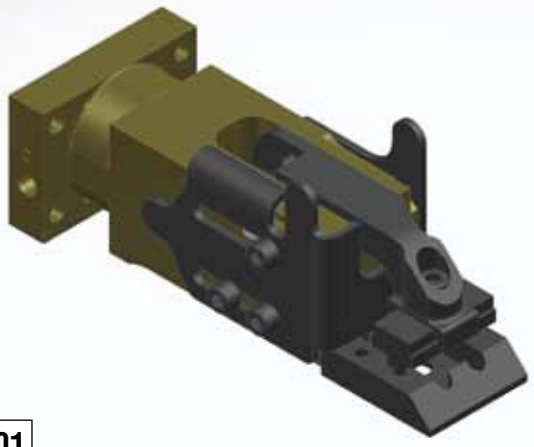

- Option provides lower flat shovel jaw with ability to mount S01 switch accessory.
- Optional double cone point and double diamond point tips stop false signal of switch when part is missing between jaws.
- Special impact plate included to protect switch cable.
- Switch sold separately.
- Available on: Size 2
  Jaw Style M

Example Ordering Data:

GRM 2 T M - 2 - 85 blank - 00 - LAA - JB031 - S01

SPECIFICATIONS

CLAMP SIZE	ACCESSORY CODE	DESCRIPTION	TIP COLOR	WEIGHT ADDER		MATERIAL THICKNESS
				lb	kg	mm
2xM	JB030	Switch Ready Jaw - No Tip	-	0.07	0.03	-
	JB031	Switch Ready Jaw - Double Cone Point Tip	Black	0.19	0.09	0.00-1.50
	JB032	Switch Ready Jaw - Double Cone Point Tip	Silver	0.19	0.09	1.51-3.00
	JB033	Switch Ready Jaw - Double Cone Point Tip	Gold	0.19	0.09	3.01-4.00
	JB034	Switch Ready Jaw - Double Diamond Point Tip	Black	0.24	0.11	0.00-1.50
	JB035	Switch Ready Jaw - Double Diamond Point Tip	Silver	0.24	0.11	1.51-3.00

KIT NUMBERS IF ORDERED SEPARATELY

CLAMP SIZE	DESCRIPTION	TIP COLOR	KIT NUMBER
2xM	Jaw Kit - No Tip	-	73068-03
	Tip Kit - Double Cone Point	Black	73068-04
	Tip Kit - Double Cone Point	Silver	73068-05
	Tip Kit - Double Cone Point	Gold	73068-06
	Tip Kit - Double Diamond Point	Black	76154-01
	Tip Kit - Double Diamond Point	Silver	76154-02

S01 SWITCH INSTALLED Bi5-Q08-AP6X2-0.25M-RS4T/S34

- Option mounts the switch (Turck Part No. Bi5-Q08-AP6X2-0.25M-RS4T/S34) into the JB03x switch mounting jaw or special switch mounting tips Tx025, 026, 027, 045, 046, 047, or 055.
- Switch allows for panel present detection at point of grip.
- Available on: Size 2
  Jaw styles S, D, F, K, M, R

Example Ordering Data:

GRM 2 T S - 2 - 45 blank - 45 blank - LAA - S01 - TA022 - TB025

SPECIFICATIONS

CLAMP SIZE	WEIGHT ADDER	
	lb	kg
2	0.11	0.05
2xM	0.08	0.03

MATCHING CORDSET 2 METERS LONG

CLAMP SIZE	PHD PART NO.	VENDOR PART NO.
2	65413-00-02	RK 4T-2

KIT NUMBERS IF ORDERED SEPARATELY

CLAMP SIZE	ACCESSORY CODE	KIT NUMBER
2	S01	65136-03
		65136-11

Pxxxx PANEL PRESENT DETECTION

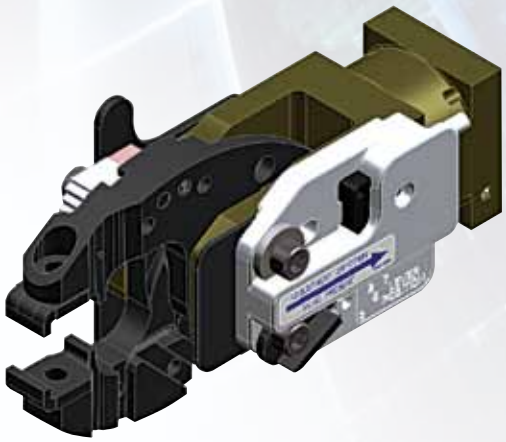

- Option provides switch housing and switch to detect presence of part.
- Position of internal target relates directly to jaw position and thickness of material being gripped.
- Ideal choice for backup or redundant signaling detection.
- Option functions within a wide range of material thicknesses 0.027 to 0.157 in [0.7 to 4.0 mm].
- Housing adjustment may be preset at factory for panel thickness in 0.004 in [0.1 mm] increments.
- P1x00 and P3x00 options do not require factory setup. For compatibility with other units, consult PHD.
- For switch option, refer to page 75.
- Available on: Size 1, 2, 4
  Jaw Styles S, C, D, F, G, H, J, K, L, M, N, P, R

Example Ordering Data:

GRM 2 T S - 2 - 45 DCB - 45 DDB - LAA - P 3 A 10

HOUSING OPTION	SWITCH HOUSING POSITION(1)	SWITCH OPTION	PANEL THICKNESS OPTION(2)
P - Panel Present	1 - Position 1	N - No Switch	00 - No Panel (Not Set)
	3 - Position 3	A - 4-Pin AC/DC Switch	07 to 40 - 0.7 mm to 4.0 mm
		B - 3-Pin AC/DC Switch	
		C - 4-Pin DC Switch	
		D - 4-Pin DC Switch	
		E - 3-Pin DC Switch	
		F - 3-Wire DC Switch	
		G - 3-Pin AC/DC Switch	

NOTES:
1) Position 1 is port side of clamp.
2) Housing adjustment may be preset at factory for panel thickness in 0.004 in [0.1 mm] increments.

CLAMP SIZE	ACCESSORY CODE	BODY OPTION	JAW OPTION	HOUSING POSITION
1	P1xxx or P3xxx	Standard, B11	S, F	1 or 3
2	P1xxx	B14	S, C, D, F, G, H, J, K, N, P, R	1
	P3xxx	Standard, B12	S, C, D, F, G, H, J, K, N, P, R	3
	P1xxx or P3xxx	Standard	L, M	1 or 3
	P1xxx or P3xxx	B08, B09, B15, B16	S, C, D, G, H, J, N, P, R	1 or 3
	P1xxx or P3xxx	B15, B16	F, K	1 or 3
4	P3xxx	Standard	S, F, G, H, J	3

JAW REBUILD KIT NUMBERS IF ORDERED SEPARATELY

CLAMP SIZE & JAW STYLE	ACCESSORY CODE	KIT NUMBER
1xS	Pxxxx	81665-002-03
1xF		81665-002-05
2xS, C, D, G, H, J, N, P, R	Pxxxx	62152-08
2xF or 2xK		62152-09
2xL or 2xM		62152-13
2-B12, 2-B14, 2-B15, 2-B16		62152-15
4xS, G, H, J	Pxxxx	62152-11
4xF		62152-12

SPECIFICATIONS

CLAMP SIZE & JAW STYLE	ENVELOPE SIZE ADDER						WEIGHT ADDER	
	LENGTH		WIDTH		HEIGHT			
	in	mm	in	mm	in	mm	lb	kg
1	0.000	0.0	0.501	12.7	0.000	0.0	0.27	0.12
2xS, C, D, G, H, J, N, P, R	0.000	0.0	0.293	7.4	0.000	0.0	0.16	0.07
2xF or 2xK	0.000	0.0	0.293	7.4	0.000	0.0	0.17	0.08
2xL or 2xM	0.000	0.0	0.171	4.3	0.000	0.0	0.17	0.07
4xS, G, H, J	0.000	0.0	0.322	8.2	0.000	0.0	0.21	0.09
4xF	0.000	0.0	0.322	8.2	0.000	0.0	0.24	0.11

Steel tips are recommended for panel present detection. For urethane tip applications, refer to Tx068 and Tx069.

Single cone point to single diamond tips are not recommended for panels ≤ 0.039 in [1.0 mm].

Single diamond to single diamond tips are recommended for panels ≤ 0.039 in [1.0 mm].

Dxxxx DOUBLE SHEET DETECTION

- Option provides switch housing and switch to detect presence of multiple parts.
- Position of internal target relates directly to jaw position and thickness of material being gripped.
- Ideal choice for backup or redundant signaling detection.
- Option functions within a wide range of material thicknesses 0.027 to 0.157 in [0.7 to 4.0 mm].
- Housing adjustment may be preset at factory for panel thickness in 0.004 in [0.1 mm] increments.
- D1x00 and D3x00 options do not require factory setup. For compatibility with other units, consult PHD.
- For switch option, refer to page 75.
- Available on: Size 1, 2, 4
  Jaw Styles S, C, D, F, G, H, J, K, L, M, N, P, R

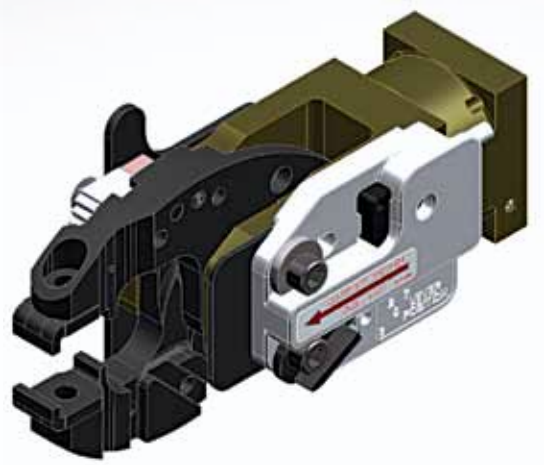

Example Ordering Data:

GRM 2 T S - 2 - 45 DCB - 45 DDB - LAA - D 3 A 10

HOUSING OPTION	SWITCH HOUSING POSITION(1)	SWITCH OPTION	PANEL THICKNESS OPTION(2)
D - Double Sheet	1 - Position 1	N - No Switch	00 - No Panel (Not Set)
	3 - Position 3	A - 4-Pin AC/DC Switch	07 to 40 - 0.7 mm to 4.0 mm
		B - 3-Pin AC/DC Switch	
		C - 4-Pin DC Switch	
		D - 4-Pin DC Switch	
		E - 3-Pin DC Switch	
		F - 3-Wire DC Switch	
		G - 3-Pin AC/DC Switch	

NOTES:
1) Position 1 is port side of clamp.
2) Housing adjustment may be preset at factory for panel thickness in 0.004 in [0.1 mm] increments.

CLAMP SIZE	ACCESSORY CODE	BODY OPTION	JAW OPTION	HOUSING POSITION
1	D1xxx or D3xxx	Standard, B11	S, F	1 or 3
2	D1xxx	B14	S, C, D, F, G, H, J, K, N, P, R	1
	D3xxx	Standard, B12	S, C, D, F, G, H, J, K, N, P, R	3
	D1xxx or D3xxx	Standard	L, M	1 or 3
	D1xxx or D3xxx	B08, B09, B15, B16	S, C, D, G, H, J, N, P, R	1 or 3
	D1xxx or D3xxx	B15, B16	F, K	1 or 3
4	D3xxx	Standard	S, F, G, H, J	3

SPECIFICATIONS

CLAMP SIZE & JAW STYLE	ENVELOPE SIZE ADDER						WEIGHT ADDER	
	LENGTH		WIDTH		HEIGHT			
	in	mm	in	mm	in	mm	lb	kg
1	0.000	0.0	0.501	12.7	0.000	0.0	0.27	0.12
2xS, C, D, G, H, J, N, P, R	0.000	0.0	0.293	7.4	0.000	0.0	0.16	0.07
2xF or 2xK	0.000	0.0	0.293	7.4	0.000	0.0	0.18	0.08
2xL or 2xM	0.000	0.0	0.171	4.3	0.000	0.0	0.17	0.08
4xS, G, H, J	0.000	0.0	0.322	8.2	0.000	0.0	0.21	0.10
4xF	0.000	0.0	0.322	8.2	0.000	0.0	0.24	0.11

JAW REBUILD KIT NUMBERS IF ORDERED SEPARATELY

CLAMP SIZE & JAW STYLE	ACCESSORY CODE	KIT NUMBER
1xS	Dxxxx	81665-002-03
1xF		81665-002-05
2xS, C, D, G, H, J, N, P, R	Dxxxx	62152-08
2xF or 2xK		62152-09
2xL or 2xM		62152-13
2-B12, 2-B14, 2-B15, 2-B16		62152-15
4xS, G, H, J	Dxxxx	62152-11
4xF		62152-12

Steel tips are recommended for double sheet detection. For urethane tip applications, refer to Tx068 and Tx069.

Single cone point to single diamond tips are not recommended for panels ≤ 0.039 in [1.0 mm].

Single diamond to single diamond tips are recommended for panels ≤ 0.039 in [1.0 mm].

Kxxxx PANEL PRESENT AND DOUBLE SHEET DETECTION

- Option provides switch housings and switches to detect presence of single to multiple parts.
- Position of internal targets relates directly to jaw position and thickness of material being gripped.
- Ideal choice for backup or redundant signaling detection.
- Option functions within a wide range of material thicknesses 0.027 to 0.157 in [0.7 to 4.0 mm].
- Housing adjustment may be preset at factory for panel thickness in 0.004 in [0.1 mm] increments.
- K1x00 and K3x00 options do not require factory setup. For compatibility with other units, consult PHD.
- For switch option, refer to page 75.
- Available on: Size 1, 2
  Jaw Styles S, C, D, F, G, H, J, K, L, M, N, P, R

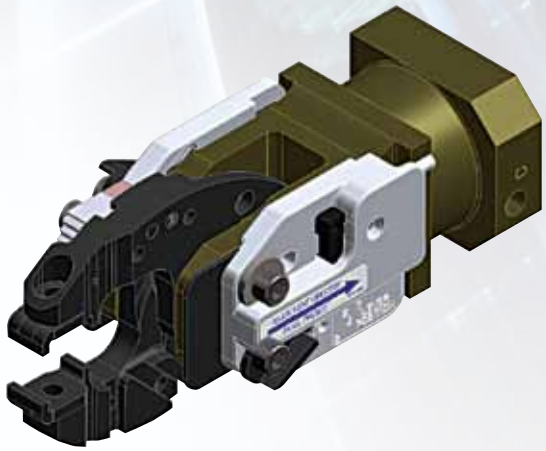

Example Ordering Data:

GRM 2 T S - 2 - 45 DCB - 45 DDB - LAA - K 3 A 10

HOUSING OPTION	SWITCH HOUSING POSITION(1)	SWITCH OPTION	PANEL THICKNESS OPTION(2)
K - Panel Present and Double Sheet	1 - Position 1 3 - Position 3	N - No Switch A - 4-Pin AC/DC Switch B - 3-Pin AC/DC Switch C - 4-Pin DC Switch D - 4-Pin DC Switch E - 3-Pin DC Switch F - 3-Wire DC Switch G - 3-Pin AC/DC Switch	00 - No Panel (Not Set) 07 to 40 - 0.7 mm to 4.0 mm

NOTES:
1) Position 1 is port side of clamp.
   K1xxx - Panel present on side 1 and double sheet on side 3
   K3xxx - Panel present on side 3 and double sheet on side 1
2) Housing adjustment may be preset at factory for panel thickness in 0.004 in [0.1 mm] increments.

CLAMP SIZE	ACCESSORY CODE	BODY OPTION	JAW OPTION	HOUSING POSITION
1	K1xxx or K3xxx	Standard, B11	S, F	1 and 3
2	K1xxx or K3xxx	B08, B09	S, C, D, G, H, J, N, P, R	1 and 3
	K1xxx or K3xxx	Standard	L, M	1 and 3
	K1xxx or K3xxx	B15, B16	S, C, D, F, G, H, J, K, N, P, R	1 and 3

JAW REBUILD KIT NUMBERS IF ORDERED SEPARATELY

CLAMP SIZE & JAW STYLE	ACCESSORY CODE	KIT NUMBER
1xS	Kxxxx	81665-002-04
1xF		81665-002-06
2xS, C, D, G, H, J, N, P, R	Kxxxx	62152-10
2xL or 2xM		62152-13
2-B15, 2-B16		62152-17

SPECIFICATIONS

CLAMP SIZE & JAW STYLE	ENVELOPE SIZE ADDER						WEIGHT ADDER	
	LENGTH		WIDTH		HEIGHT			
	in	mm	in	mm	in	mm	lb	kg
1	0.000	0.0	1.002	25.5	0.000	0.0	0.54	0.24
2xS, C, D, G, H, J, N, P, R	0.000	0.0	0.586	14.9	0.000	0.0	0.32	0.15
2xF or 2xK	0.000	0.0	0.586	14.9	0.000	0.0	0.34	0.15
2xL or 2xM	0.000	0.0	0.342	8.7	0.000	0.0	0.34	0.15

Steel tips are recommended for panel present and double sheet detection. For urethane tip applications, refer to Tx068 and Tx069.

Single cone point to single diamond tips are not recommended for panels ≤ 0.039 in [1.0 mm].

Single diamond to single diamond tips are recommended for panels ≤ 0.039 in [1.0 mm].

REPLACEMENT KIT NUMBERS IF ORDERED SEPARATELY

CLAMP SIZE/ JAW STYLE	PANEL PRESENT DETECTION		DOUBLE SHEET DETECTION		PANEL PRESENT & DOUBLE SHEET DETECTION		DESCRIPTION
	ACCESSORY	KIT NO.	ACCESSORY	KIT NO.	ACCESSORY	KIT NO.	
1xS	PxNxx	81665-013-S-P-N	DxNxx	81665-013-S-D-N	KxNxx	81665-013-S-K-N	Housing without switch kit
	PxAxx	81665-013-S-P-A	DxAxx	81665-013-S-D-A	KxAxx	81665-013-S-K-A	Housing with 4-pin AC/DC switch kit
	PxBxx	81665-013-S-P-B	DxBxx	81665-013-S-D-B	KxBxx	81665-013-S-K-B	Housing with 3-pin AC/DC switch kit
	PxCxx	81665-013-S-P-C	DxCxx	81665-013-S-D-C	KxCxx	81665-013-S-K-C	Housing with 4-pin DC switch kit
	PxDxx	81665-013-S-P-D	DxDxx	81665-013-S-D-D	KxDxx	81665-013-S-K-D	Housing with 4-pin DC switch kit
	PxExx	81665-013-S-P-E	DxExx	81665-013-S-D-E	KxExx	81665-013-S-K-E	Housing with 3-pin DC switch kit
	PxFxx	81665-013-S-P-F	DxFxx	81665-013-S-D-F	KxFxx	81665-013-S-K-F	Housing with 3-wire DC switch kit
	PxGxx	81665-013-S-P-G	DxGxx	81665-013-S-D-G	KxGxx	81665-013-S-K-G	Housing with 3-pin AC/DC switch kit
1xF	PxNxx	81665-013-F-P-N	DxNxx	81665-013-F-D-N	KxNxx	81665-013-F-K-N	Housing without switch kit
	PxAxx	81665-013-F-P-A	DxAxx	81665-013-F-D-A	KxAxx	81665-013-F-K-A	Housing with 4-pin AC/DC switch kit
	PxBxx	81665-013-F-P-B	DxBxx	81665-013-F-D-B	KxBxx	81665-013-F-K-B	Housing with 3-pin AC/DC switch kit
	PxCxx	81665-013-F-P-C	DxCxx	81665-013-F-D-C	KxCxx	81665-013-F-K-C	Housing with 4-pin DC switch kit
	PxDxx	81665-013-F-P-D	DxDxx	81665-013-F-D-D	KxDxx	81665-013-F-K-D	Housing with 4-pin DC switch kit
	PxExx	81665-013-F-P-E	DxExx	81665-013-F-D-E	KxExx	81665-013-F-K-E	Housing with 3-pin DC switch kit
	PxFxx	81665-013-F-P-F	DxFxx	81665-013-F-D-F	KxFxx	81665-013-F-K-F	Housing with 3-wire DC switch kit
	PxGxx	81665-013-F-P-G	DxGxx	81665-013-F-D-G	KxGxx	81665-013-F-K-G	Housing with 3-pin AC/DC switch kit
2	PxNxx	71964-03	DxNxx	71964-09	KxNxx	71964-19	Housing without switch kit
	PxAxx	71964-04	DxAxx	71964-10	KxAxx	71964-20	Housing with 4-pin AC/DC switch kit
	PxBxx	71964-15	DxBxx	71964-17	KxBxx	71964-22	Housing with 3-pin AC/DC switch kit
	PxCxx	71964-35	DxCxx	71964-55	KxCxx	71964-58	Housing with 4-pin DC switch kit
	PxDxx	71964-05	DxDxx	71964-11	KxDxx	71964-21	Housing with 4-pin DC switch kit
	PxExx	71964-64	DxExx	71964-67	KxExx	71964-70	Housing with 3-pin DC switch kit
	PxFxx	71964-76	DxFxx	71964-79	KxFxx	71964-82	Housing with 3-wire DC switch kit
	PxGxx	71964-88	DxGxx	71964-91	KxGxx	71964-94	Housing with 3-pin AC/DC switch kit
2xF or 2xK	PxNxx	71964-06	DxNxx	71964-12	—	—	Housing without switch kit
	PxAxx	71964-07	DxAxx	71964-13	—	—	Housing with 4-pin AC/DC switch kit
	PxBxx	71964-16	DxBxx	71964-18	—	—	Housing with 3-pin AC/DC switch kit
	PxCxx	71964-53	DxCxx	71964-56	—	—	Housing with 4-pin DC switch kit
	PxDxx	71964-08	DxDxx	71964-14	—	—	Housing with 4-pin DC switch kit
	PxExx	71964-65	DxExx	71964-68	—	—	Housing with 3-pin DC switch kit
	PxFxx	71964-77	DxFxx	71964-80	—	—	Housing with 3-wire DC switch kit
	PxGxx	71964-89	DxGxx	71964-92	—	—	Housing with 3-pin AC/DC switch kit
2xL or 2xM	PxNxx	71964-27	DxNxx	71964-23	KxNxx	71964-31	Housing without switch kit
	PxAxx	71964-28	DxAxx	71964-24	KxAxx	71964-32	Housing with 4-pin AC/DC switch kit
	PxBxx	71964-29	DxBxx	71964-25	KxBxx	71964-33	Housing with 3-pin AC/DC switch kit
	PxCxx	71964-54	DxCxx	71964-57	KxCxx	71964-59	Housing with 4-pin DC switch kit
	PxDxx	71964-30	DxDxx	71964-26	KxDxx	71964-34	Housing with 4-pin DC switch kit
	PxExx	71964-66	DxExx	71964-69	KxExx	71964-71	Housing with 3-pin DC switch kit
	PxFxx	71964-78	DxFxx	71964-81	KxFxx	71964-83	Housing with 3-wire DC switch kit
	PxGxx	71964-90	DxGxx	71964-93	KxGxx	71964-95	Housing with 3-pin AC/DC switch kit
2-B12 2-B14 2-B15 2-B16	PxNxx	71964-113	DxNxx	71964-121	KxNxx	71964-129	Housing without switch kit
	PxAxx	71964-114	DxAxx	71964-122	KxAxx	71964-130	Housing with 4-pin AC/DC switch kit
	PxBxx	71964-115	DxBxx	71964-123	KxBxx	71964-131	Housing with 3-pin AC/DC switch kit
	PxCxx	71964-116	DxCxx	71964-124	KxCxx	71964-132	Housing with 4-pin DC switch kit
	PxDxx	71964-117	DxDxx	71964-125	KxDxx	71964-133	Housing with 4-pin DC switch kit
	PxExx	71964-118	DxExx	71964-126	KxExx	71964-134	Housing with 3-pin DC switch kit
	PxFxx	71964-119	DxFxx	71964-127	KxFxx	71964-135	Housing with 3-wire DC switch kit
	PxGxx	71964-120	DxGxx	71964-128	KxGxx	71964-136	Housing with 3-pin AC/DC switch kit
4	PxNxx	71964-36	DxNxx	71964-44	—	—	Housing without switch kit
	PxAxx	71964-37	DxAxx	71964-45	—	—	Housing with 4-pin AC/DC switch kit
	PxBxx	71964-39	DxBxx	71964-47	—	—	Housing with 3-pin AC/DC switch kit
	PxCxx	71964-60	DxCxx	71964-62	—	—	Housing with 4-pin DC switch kit
	PxDxx	71964-38	DxDxx	71964-46	—	—	Housing with 4-pin DC switch kit
	PxExx	71964-72	DxExx	71964-74	—	—	Housing with 3-pin DC switch kit
	PxFxx	71964-84	DxFxx	71964-86	—	—	Housing with 3-wire DC switch kit
	PxGxx	71964-96	DxGxx	71964-98	—	—	Housing with 3-pin AC/DC switch kit
4xF	PxNxx	71964-40	DxNxx	71964-48	—	—	Housing without switch kit
	PxAxx	71964-41	DxAxx	71964-49	—	—	Housing with 4-pin AC/DC switch kit
	PxBxx	71964-43	DxBxx	71964-51	—	—	Housing with 3-pin AC/DC switch kit
	PxCxx	71964-61	DxCxx	71964-63	—	—	Housing with 4-pin DC switch kit
	PxDxx	71964-42	DxDxx	71964-50	—	—	Housing with 4-pin DC switch kit
	PxExx	71964-73	DxExx	71964-75	—	—	Housing with 3-pin DC switch kit
	PxFxx	71964-85	DxFxx	71964-87	—	—	Housing with 3-wire DC switch kit
	PxGxx	71964-97	DxGxx	71964-99	—	—	Housing with 3-pin AC/DC switch kit

SWITCH OPTION A 72121-001

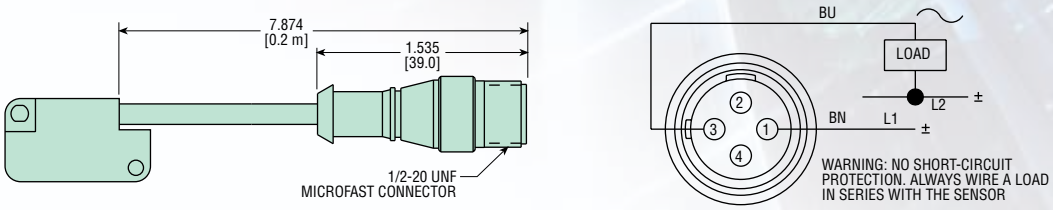

SWITCH OPTION B 72121-003

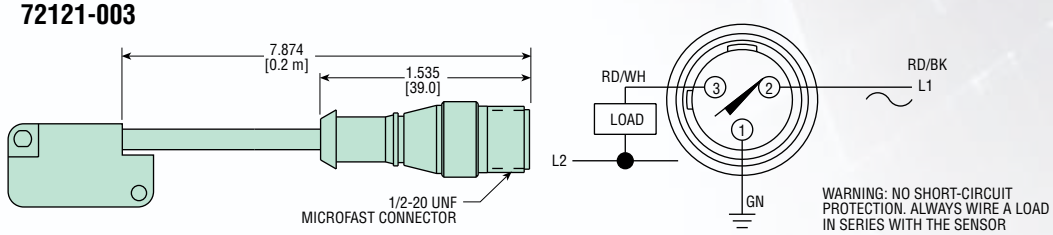

SWITCH OPTION C 72121-004 (NPN)

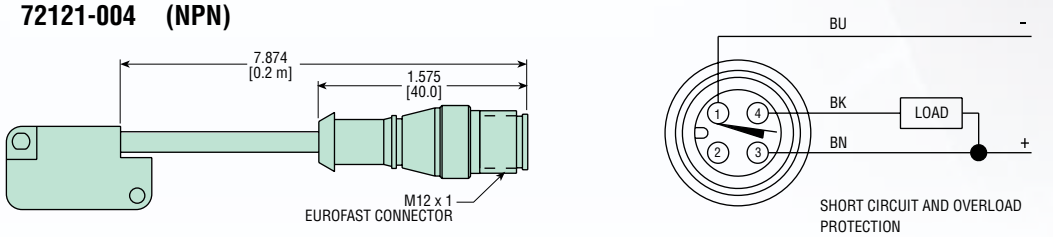

SWITCH OPTION D 72121-002 (PNP)

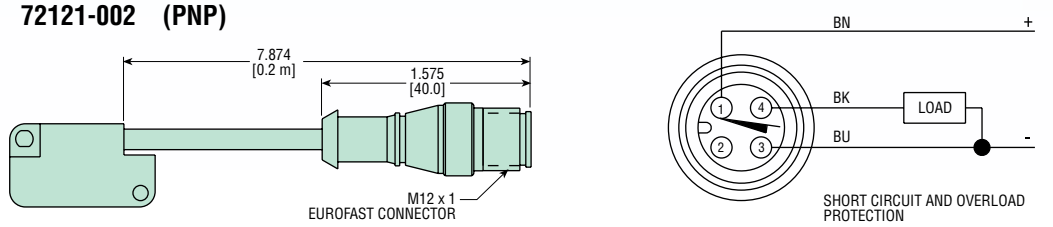

SWITCH OPTION E 72121-005 (PNP)

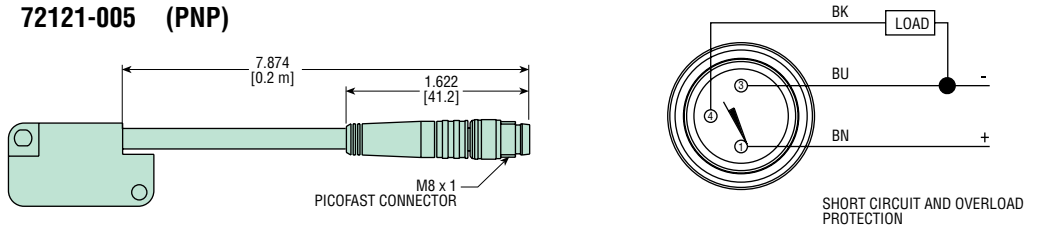

SWITCH OPTION F 72121-008 (PNP)

SWITCH OPTION G 72121-009

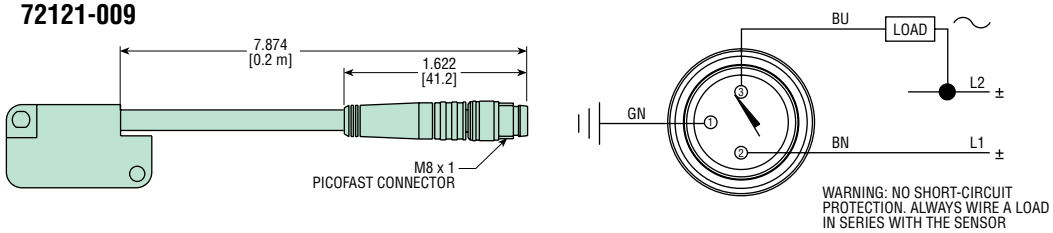

All dimensions are reference only unless specifically toleranced.

SWITCH NUMBERS IF ORDERED SEPARATELY

SWITCH OPTION	SWITCH TYPE	PHD SWITCH NUMBER	VENDOR	VENDOR PART NUMBER
A	4-pin AC/DC - N.O.	72121-001	Turck	Bi 2-Q10S-AZ31X-0.2M-SB 4T/S1597
B	3 -pin AC/DC - N.O.	72121-003	Turck	Bi 2-Q10S-AZ31X-0.2M-SB 3T
C	4-pin DC - N.O. - NPN	72121-004	Turck	Bi 2-Q10S-AN6X-0.2M-RS 4T
D	4-pin DC - N.O. - PNP	72121-002	Turck	Bi 2-Q10S-AP6X-0.2M-RS 4T
E	3-pin DC - N.O. - PNP	72121-005	Turck	Bi 2-Q10S-AP6X-0.2M-PSG 3M
F	3-wire DC - N.O. - PNP	72121-008	Turck	Bi 2-Q10S-AP6X
G	3-pin AC/DC - N.O.	72121-009	Turck	Bi 2-Q10S-AZ31X-0.2M-PSG 3F

MATCHING CORDSETS
2 METERS LONG

SWITCH OPTION	PHD PART NUMBER	VENDOR PART NUMBER
A	—	—
B	76817-00-02	KB 3T-2
C	65413-00-02	RK 4T-2
D	65413-00-02	RK 4T-2
E	75733-00-02	PKG 3M-2
F	—	—
G	75733-00-02	PKG 3M-2

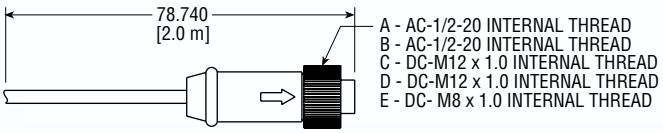

MATING CORDSET

PANEL PRESENT DETECTION FIELD SET-UP PROCEDURE:

1) Using air pressure, close clamp jaws with panel between tips.
2) Loosen both screws and remove lever from locating hole.
3) Slide housing in direction of arrow (toward cylinder) until switch just turns on.
4) Snug flat washer screw. Housing should still slide back and forth.
5) Rotate lever into hole that matches present housing location and snug screw.
6) Wiggle housing forward and backward. If switch flickers off and on, rotate the lever into the next hole with a lower number (i.e., from 5 to 4). Wiggle housing again. Switch should stay on. If not, continue to lower numbered hole until switch does not flicker.
7) Tighten both screws to 85 lb-in [9.6 Nm]. Switch is now set.

TO TEST THE SETUP:

1) Using air pressure, close clamp jaws with panel between tips. The switch should stay on.
2) Close clamp jaws with no panel between tips. The switch should turn off.

NOTE: With no panel present, the switch will flicker on as the target passes under the switch and turn off as the jaws reach full closed.
For panels 0.027 in [0.7 mm] and below, it may be necessary to set the switch in the first hole that flickers (see note 6). Do not rotate lever into the next hole with a lower number. Instead, leave the lever in the same hole and slide the housing in the direction of the cylinder so the switch stays on and tighten both screws.

DOUBLE SHEET DETECTION FIELD SET-UP PROCEDURE:

1) Using pressure, close clamp jaws with one panel between tips.
2) Loosen both screws and remove lever from locating hole.
3) Slide housing in direction of arrow (toward jaws) until switch just turns on.
4) Snug flat washer screw. The housing should still slide back and forth.
5) Rotate lever into hole that matches present housing location and snug screw.
6) Wiggle housing forward and backward. If switch flickers off and on, rotate the lever into the next hole with a higher number (i.e., from 2 to 3). Wiggle housing again. Switch should stay on. If not, continue to higher numbered hole until switch does not flicker.
7) Tighten both screws to 85 lb-in [9.6 Nm]. Switch is now set.

TO TEST THE SETUP:

1) Using pressure, close clamp jaws with one panel between tips. The switch should stay on.
2) Close clamp jaws with two panels between tips. The switch should turn off.

NOTE: With no panel present, the switch will turn on and remain on as the target passes under the switch.

PA(B)xxx POSITIONAL SENSING DETECTION

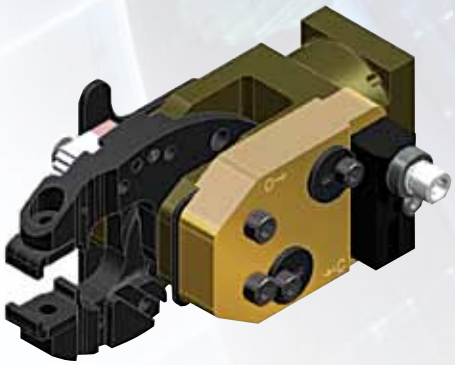

- Option provides switch housing and adjustable switches to detect open and close positions.
- Position of internal target relates directly to jaw position as jaws open and close.
- Switches are weld-field immune.
- For switch option, refer to page 79.
- Available on: Size 1, 2, 4
  Jaw Styles S, C, D, F, G, H, J, K, N, P, R

Example Ordering Data:

GRM 2 T S - 2 - 45 DCB - 45 DDB - LAA - P A 3 D 9

HOUSING OPTION	SENSING POSITION	SWITCH HOUSING POSITION(1)	SWITCH OPTION(2)	CONNECTOR POSITION(3)
P - Positional Sensing	A - Standard	1 - Position 1	N - No Switch	1 - Parallel to Bore
	B - Reversed	3 - Position 3	A - 5-Pin AC/DC Switch	9 - Perpendicular to Bore
			D - 4-Pin DC Switch	
			E - 4-Pin DC Switch	
			F - 4-Pin DC Switch	
			H - 4-Pin DC Switch	
			J - 4-Pin DC Switch	

NOTES:
1) Position 1 is port side of clamp.
2) Switch options D, F, and H are not available on size 1.
3) Connector position is adjustable for all switches except switch option A. Switch option A is available in connector position 1.

CLAMP SIZE	ACCESSORY CODE	BODY OPTION	JAW OPTION	HOUSING POSITION
1	PA(B)xxx	Standard, B11	S, F	1 or 3
2	PA(B)1xx	B14	S, C, D, F, G, H, J, K, N, P, R	1
	PA(B)3xx	Standard, B12	S, C, D, F, G, H, J, K, N, P, R	3
	PA(B)1xx or PA(B)3xx	B08, B09, B15, B16	S, C, D, G, H, J, N, P, R	1 or 3
	PA(B)1xx or PA(B)3xx	B15, B16	F, K	1 or 3
4	PA(B)3xx	Standard	S, F, G, H, J	3

JAW REBUILD KIT NUMBERS IF ORDERED SEPARATELY

CLAMP SIZE & JAW STYLE	ACCESSORY CODE	KIT NUMBER
1xS	PA(B)xxx	81665-002-03
1xF		81665-002-05
2xS, C, D, G, H, J, N, P, R	PA(B)xxx	62152-08
2xF or 2xK		62152-09
2-B12, 2-B14, 2-B15, 2-B16		62152-15
4xS, G, H, J	PA(B)xxx	62152-11
4xF		62152-12

SPECIFICATIONS

CLAMP SIZE & JAW STYLE	ENVELOPE SIZE ADDER						WEIGHT ADDER	
	LENGTH		WIDTH		HEIGHT			
	in	mm	in	mm	in	mm	lb	kg
1	0.000	0.0	1.214	30.8	0.000	0.0	0.33	0.15
2xS, C, D, G, H, J, N, P, R	0.000	0.0	1.195	30.3	0.000	0.0	0.35	0.16
2xF or 2xK	0.000	0.0	1.195	30.3	0.000	0.0	0.36	0.16
4xS, G, H, J	0.000	0.0	1.195	30.3	0.000	0.0	0.43	0.19
4xF	0.000	0.0	1.195	30.3	0.000	0.0	0.45	0.21

JAW REBUILD KIT NUMBERS IF ORDERED SEPARATELY

CLAMP SIZE & JAW STYLE	ACCESSORY CODE	KIT NUMBER
1xS	PA(B)xxx and Pxxxx or Dxxxx	81665-002-04
1xF		81665-002-06
2xS, C, D, G, H, J, N, P, R	PA(B)xxx and Pxxxx or Dxxxx	62152-10
2-B15, 2-B16		62152-15

Urethane tips are not recommended for positional sensing detection.

PAxxx option replaces PSxxx option. PA option positions satellite switch S02 or S2 to sense open (unclamped) and S01 or S1 to sense close (clamped).

PBxxx option replaces PRxxx option. PB option positions satellite switch S01 or S1 to sense open (unclamped) and S02 or S2 to sense close (clamped).

See tables on switch option page for satellite switch to quick disconnect pin number relationships.

Connector Position -PA(B)xA1, -PA(B)xD1, -PA(B)xE1, -PA(B)xF1, -PA(B)xH1, and -PA(B)xJ1 options not recommended for use with the following mounts: C, M21, M39.

Connector position 1 will limit rotation about the clamp body for the following mounts: R, S, W, M01, M07, M22, M23, M25, M27-M30, M36-M38, M42, M46, M47.

KIT NUMBERS IF ORDERED SEPARATELY

CLAMP SIZE/ JAW STYLE	POSITIONAL SENSING DETECTION		DESCRIPTION
	ACCESSORY	KIT NO.	
1xS	PA(B)xNx	81665-010-01	Housing without switch kit
1xF	PA(B)xNx	81665-010-02	Housing without switch kit
2	PA(B)xNx	72914-03	Housing without switch kit
	PA(B)xA1	72914-07	Housing with 5-pin AC/DC switch kit
	PA(B)xDx	72914-04	Housing with 4-pin DC switch kit
	PA(B)xEx	72914-09	Housing with 4-pin DC switch kit
	PA(B)xFx	72914-22	Housing with 4-pin DC switch kit
	PA(B)xHx	72914-34	Housing with 4-pin DC switch kit
	PA(B)xJx	72914-35	Housing with 4-pin DC switch kit
2xF or 2xK	PA(B)xNx	72914-05	Housing without switch kit
	PA(B)xA1	72914-08	Housing with 5-pin AC/DC switch kit
	PA(B)xDx	72914-06	Housing with 4-pin DC switch kit
	PA(B)xEx	72914-10	Housing with 4-pin DC switch kit
	PA(B)xFx	72914-23	Housing with 4-pin DC switch kit
	PA(B)xHx	72914-36	Housing with 4-pin DC switch kit
	PA(B)xJx	72914-37	Housing with 4-pin DC switch kit
2-B12 2-B14 2-B15 2-B16	PA(B)xNx	72914-51	Housing without switch kit
	PA(B)xA1	72914-52	Housing with 5-pin AC/DC switch kit
	PA(B)xDx	72914-53	Housing with 4-pin DC switch kit
	PA(B)xEx	72914-54	Housing with 4-pin DC switch kit
	PA(B)xFx	72914-55	Housing with 4-pin DC switch kit
	PA(B)xHx	72914-56	Housing with 4-pin DC switch kit
	PA(B)xJx	72914-57	Housing with 4-pin DC switch kit
4	PA(B)xNx	72914-14	Housing without switch kit
	PA(B)xA1	72914-18	Housing with 5-pin AC/DC switch kit
	PA(B)xDx	72914-15	Housing with 4-pin DC switch kit
	PA(B)xEx	72914-20	Housing with 4-pin DC switch kit
	PA(B)xFx	72914-24	Housing with 4-pin DC switch kit
	PA(B)xHx	72914-38	Housing with 4-pin DC switch kit
	PA(B)xJx	72914-39	Housing with 4-pin DC switch kit
4xF	PA(B)xNx	72914-16	Housing without switch kit
	PA(B)xA1	72914-19	Housing with 5-pin AC/DC switch kit
	PA(B)xDx	72914-17	Housing with 4-pin DC switch kit
	PA(B)xEx	72914-21	Housing with 4-pin DC switch kit
	PA(B)xFx	72914-25	Housing with 4-pin DC switch kit
	PA(B)xHx	72914-40	Housing with 4-pin DC switch kit
	PA(B)xJx	72914-41	Housing with 4-pin DC switch kit
4xG	PA(B)xNx	72914-27	Housing without switch kit
	PA(B)xA1	72914-28	Housing with 5-pin AC/DC switch kit
	PA(B)xDx	72914-29	Housing with 4-pin DC switch kit
	PA(B)xEx	72914-30	Housing with 4-pin DC switch kit
	PA(B)xFx	72914-31	Housing with 4-pin DC switch kit
	PA(B)xHx	72914-42	Housing with 4-pin DC switch kit
	PA(B)xJx	72914-43	Housing with 4-pin DC switch kit

SWITCH OPTION A

SWITCH OPTION A	**GRM1**	**81687-001-GRM1**
	GRM2, 4	**72914-11**

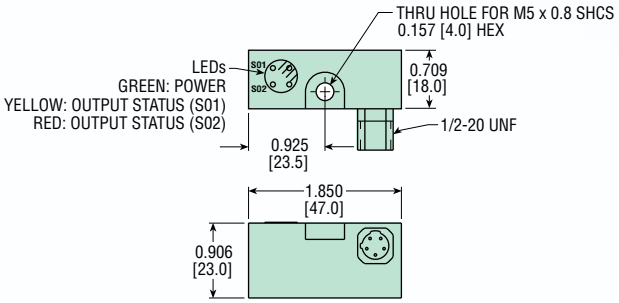

OPTION CODE	SATELLITE UNCLAMPED	SATELLITE CLAMPED	QUICK DISCONNECT PIN NUMBER
PAxA1	S02	S01	S01 = PIN 5
PBxA1	S01	S02	S02 = PIN 4

4-WIRE AC/DC

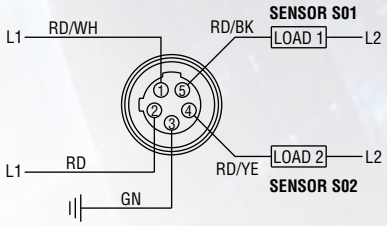

SWITCH OPTION D / SWITCH OPTION H

SWITCH OPTION D	**GRM2, 4**	**72914-12**	**(PNP)**
SWITCH OPTION H	**GRM2, 4**	**72914-32**	**(NPN)**

(Not available on size 1)

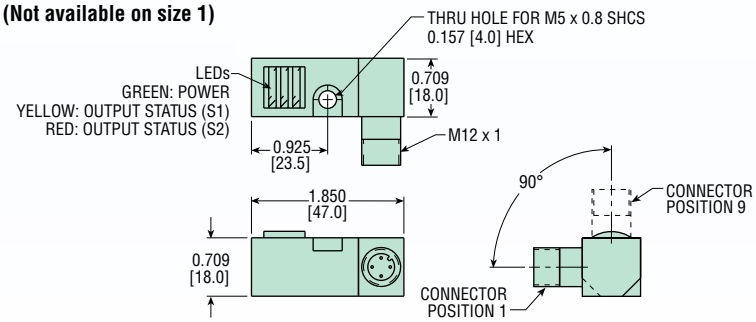

OPTION CODE	SATELLITE UNCLAMPED	SATELLITE CLAMPED	QUICK DISCONNECT PIN NUMBER
PAxDx or PAxHx	S2	S1	S1 = PIN 4
PBxDx or PBxHx	S1	S2	S2 = PIN 2

4-WIRE DC (V1 TYPE)
PNP DUAL NORMALLY OPEN

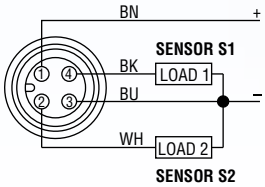

4-WIRE DC (V1 TYPE)
NPN DUAL NORMALLY OPEN

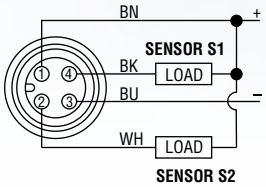

SWITCH OPTION E / SWITCH OPTION J

SWITCH OPTION E	**GRM1**	**81687-003-GRM1**	**(PNP)**
	GRM2, 4	**72914-13**	**(PNP)**
SWITCH OPTION J	**GRM1**	**81687-006-GRM1**	**(NPN)**
	GRM2, 4	**72914-33**	**(NPN)**

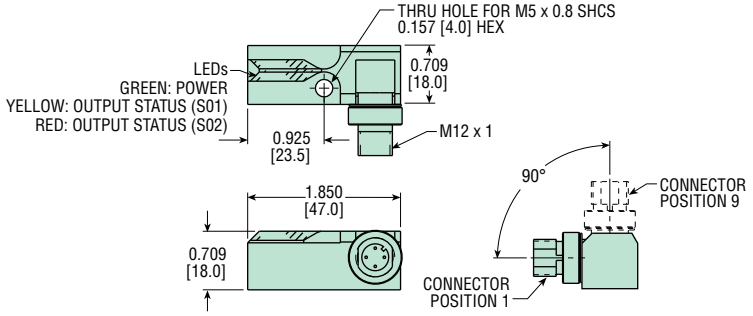

OPTION CODE	SATELLITE UNCLAMPED	SATELLITE CLAMPED	QUICK DISCONNECT PIN NUMBER
PAxEx or PAxJx	S02	S01	S01 = PIN 4
PBxEx or PBxJx	S01	S02	S02 = PIN 2

4-WIRE DC
PNP DUAL NORMALLY OPEN

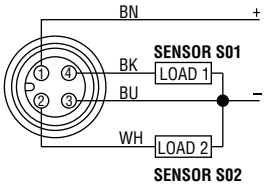

4-WIRE DC (V1 TYPE)
NPN DUAL NORMALLY OPEN

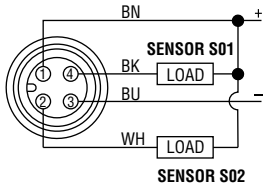

SWITCH OPTION F

SWITCH OPTION F	**72914-26**	**(PNP)**

(Not available on size 1)

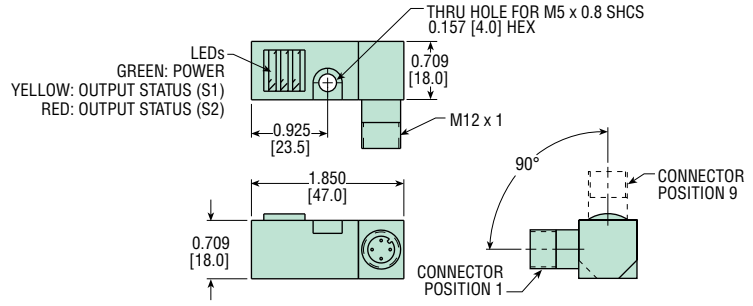

OPTION CODE	SATELLITE UNCLAMPED	SATELLITE CLAMPED	QUICK DISCONNECT PIN NUMBER
PAxFx	S2	S1	S1 = PIN 4
PBxFx	S1	S2	S2 = PIN 2

4-WIRE DC
PNP DUAL NORMALLY OPEN

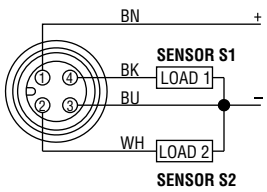

All dimensions are reference only unless specifically toleranced.

SWITCH KIT NUMBERS IF ORDERED SEPARATELY

CLAMP SIZE	SWITCH OPTION	SWITCH TYPE	PHD SWITCH KIT NUMBER	VENDOR	VENDOR PART NUMBER
1	A	5-pin AC/DC - N.O.	81687-001-GRM1	Turck	Ni 2-ISI-0.055-BA-2ADZ32X4-B3151/S34
2, 4			72914-11		Ni 2-Q6.5-ADZ32-0.16-FSB 5.4X4/S304
2, 4	D	4-pin DC - N.O. - PNP	72914-12	Pepperl+Fuchs	NBN2-F581-160S6-E8-V1
1	E	4-pin DC - N.O. - PNP	81687-003-GRM1	Turck	Ni 2-ISI-0.055-BDS-2AP6X3-H1141/S34
2, 4			72914-13		Ni 2-Q6.5-0.16-BDS-2AP6X3-H1141/S34
2, 4	F	4-pin DC - N.O. - PNP	72914-26	IFM Efector	IN 5375
2, 4	H	4-pin DC - N.O. - NPN	72914-32	Pepperl+Fuchs	NBN2-F581-160S6-E10-V1
1	J	4-pin DC - N.O. - NPN	81687-006-GRM1	Turck	Ni 2-ISI-0.055-BDS-2AN6X3-H1141/S34
2, 4			72914-33		Ni 2-Q6.5-AN6-0.16-FS 4.4X3/S304

MATCHING CORDSETS
2 METERS LONG

SWITCH OPTION	PHD PART NUMBER	VENDOR PART NUMBER
A	73317-00-02	KB 5T-2
D	65440-001-02	V1-G-YE2M-PVC
E	78039-00-02	RK 4.4T-2
F	65440-001-02	V1-G-YE2M-PVC
H	65440-001-02	V1-G-YE2M-PVC
J	78039-00-02	RK 4.4T-2

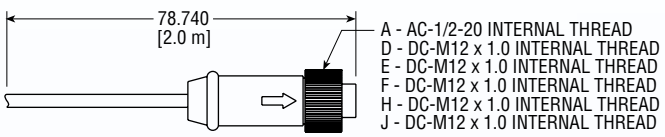

MATING CORDSET

POSITIONAL SENSING DETECTION FIELD SET-UP PROCEDURE:

1) Using air pressure, close clamp jaws with panel between tips.
2) Loosen but do not remove screw adjacent to letter “C” (close) on switch cover.
3) Slide screw in direction opposite to arrow (toward cylinder) until switch turns off.
4) Slide screw in direction of arrow (toward jaws) until switch turns on.
5) Align washer under head of screw to cover slot on switch cover before tightening.
6) Tighten screw to 44 lb-in [5.0 Nm]. Close switch is now set.
7) Using air pressure, open clamp jaws.
8) Loosen but do not remove screw adjacent to letter “O” (open) on switch cover.
9) Slide screw in direction opposite to arrow (toward jaws) until switch turns off.
10) Slide screw in direction of arrow (toward cylinder) until switch turns on.
11) Align washer under head of screw to cover slot on switch cover before tightening.
12) Tighten screw to 44 lb-in [5.0 Nm]. Open switch is now set.

TO TEST THE SETUP:

13) Using air pressure, close clamp jaws with panel between tips. The switch should turn on.
14) Using air pressure, open clamp jaws. The switch should turn on.

V2 FLUORO-ELASTOMER SEALS

- Option provides Fluoro-elastomer rod, piston, and bore plug seals.
- Seals compatible with certain fluids.
- Available on: All sizes
  All Jaw Styles

Example Ordering Data:

GRM 2 T S - 2 - 45 DCB - 45 DDB - LAA - V2

SPECIFICATIONS

CLAMP SIZE	WEIGHT ADDER	
	lb	kg
ALL	0.00	0.00

SEAL KIT NUMBERS IF ORDERED SEPARATELY

CLAMP SIZE	KIT NUMBER
1	65498-08
2	65498-03
2-B08	65498-04
4	65498-05

This option is not for high temperature applications.

Contact your local distributor or PHD for high temperature applications.

Seal compatibility should be checked with the fluid manufacturer for proper application.

KEY	PART DESCRIPTION		PART NUMBER GRM1TS
1	Body	Imperial	81666-001-11
		Metric	81666-001-12
2	Rod Seal		59842-006-1
3	Piston Rod/Jaw Driver		81669-004
4	Shock Pad		54600-06
5	Piston		81668-003
6	Piston Seal		74042-006
7	SFHCS (M5 x 16)		59104-587
8	Bore Plug		61466
9	O-Ring Seal		3642-033-1
10	Retaining Ring		57618-028
11A	Jaw (S) 0°		81667-002-000
	Jaw (S) 5°		81667-002-050
	Jaw (S) 14°		81667-002-140
	Jaw (S) 30°		81667-002-300
	Jaw (S) 50°		81667-002-500
11B	Jaw (S) 0°		81667-002-000
	Jaw (S) 5°		81667-002-050
	Jaw (S) 14°		81667-002-140
	Jaw (S) 30°		81667-002-300
	Jaw (S) 50°		81667-002-500
12	Dowel Pin (6 x 32)		17831-098
13	Dowel Pin (5 x 32)		52416-020
14	Roller Bushing		74506-01
15	Slider Bushing		81670-001
16A	Impact Plate		81671-001
16B	Impact Plate		81671-001
17	LHCS (M5 x 8)		59104-414

KIT DESCRIPTION	KIT NUMBER GRM1TS
Seal Kit	81665-001-01
Jaw Rebuild Kit(1)	81665-002-00
Fastener Kit	81665-003-00
Impact Plate Kit	81665-004-00

NOTE:
1) Jaw rebuild kits for Pxxxx, Dxxxx, Kxxxx, and PA(B)xxx options can be found in their respective catalog sections.
2) Items shown in □ are included in fastener kit.
3) Items shown in ◇ are included in seal kit.
4) Items shown in ⬡ are included in jaw rebuild kit.
5) Items shown in ⬭ are included in impact plate kit.

11A & 11B

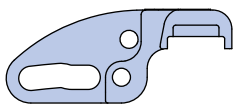
81667-002-000

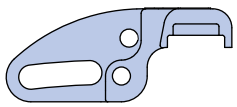
81667-002-050

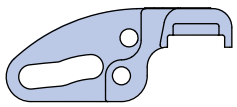
81667-002-140

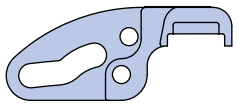
81667-002-300

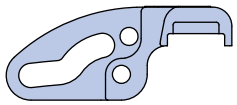
81667-002-500

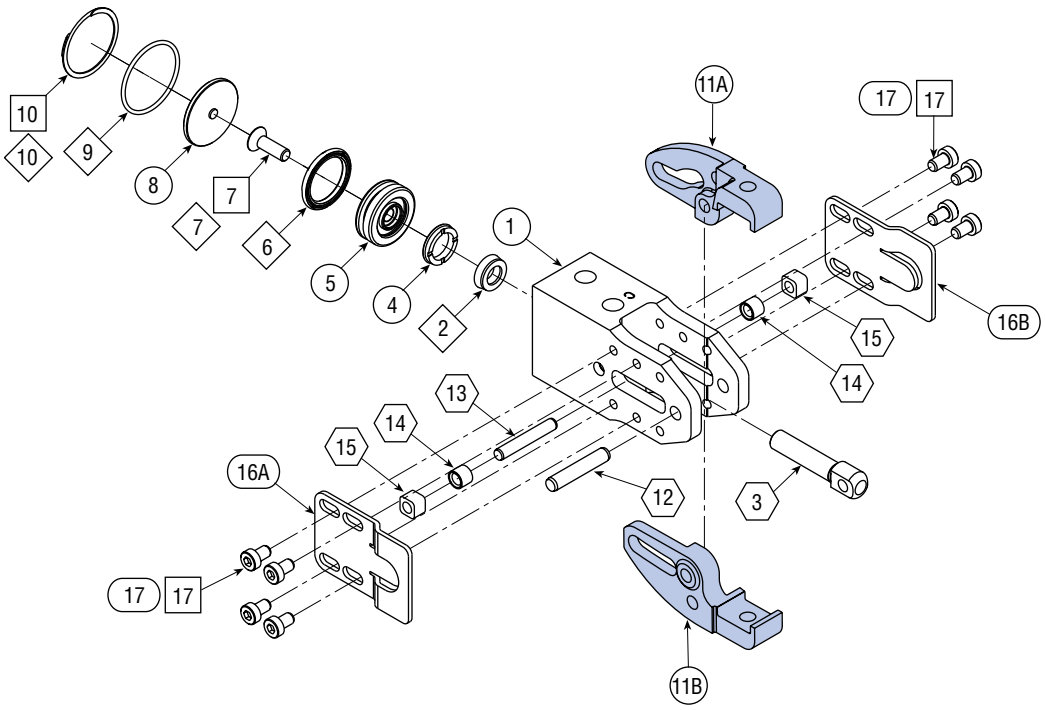

EXPLODED ASSEMBLY
FLANGE JAW STYLE "F"
SIZE 1

KEY	PART DESCRIPTION		PART NUMBER GRM1TF
1	Body	Imperial	81666-006-11
		Metric	81666-006-12
2	Rod Seal		59842-006-1
3	Piston Rod/Jaw Driver		81669-004
4	Shock Pad		54600-06
5	Piston		81668-003
6	Piston Seal		74042-006
7	SFHCS (M5 X 16)		59104-587
8	Bore Plug		61466
9	O-Ring Seal		3642-033-1
10	Retaining Ring		57618-028
11A	Jaw (F) 30°		81667-004-300
	Jaw (F) 60°		81667-004-600
11B	Jaw (F) 0°		81667-005-000
12	Dowel Pin (6 x 40)		17831-009
13	Dowel Pin (5 x 40)		52416-091
14	Roller Bushing		74506-01
15	Slider Bushing		81670-002
16A	Impact Plate		81671-001
16B	Impact Plate		81671-001
17	LHCS (M5 x 8)		59104-414

KIT DESCRIPTION	KIT NUMBER GRM1TF
Seal Kit	81665-001-01
Jaw Rebuild Kit(1)	81665-002-03
Fastener Kit	81665-003-00
Impact Plate Kit	81665-004-00

NOTE:

1) Jaw rebuild kits for Pxxxx, Dxxxx, Kxxxx, and PA(B)xxx options can be found in their respective catalog sections.
2) Items shown in □ are included in fastener kit.
3) Items shown in ◇ are included in seal kit.
4) Items shown in ⬡ are included in jaw rebuild kit.
5) Items shown in ⬭ are included in impact plate kit.

11A

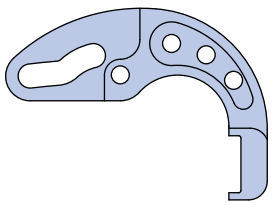

81667-004-300

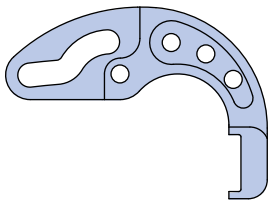

81667-004-600

11B

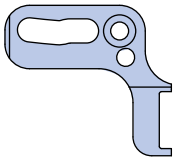

81667-005-000

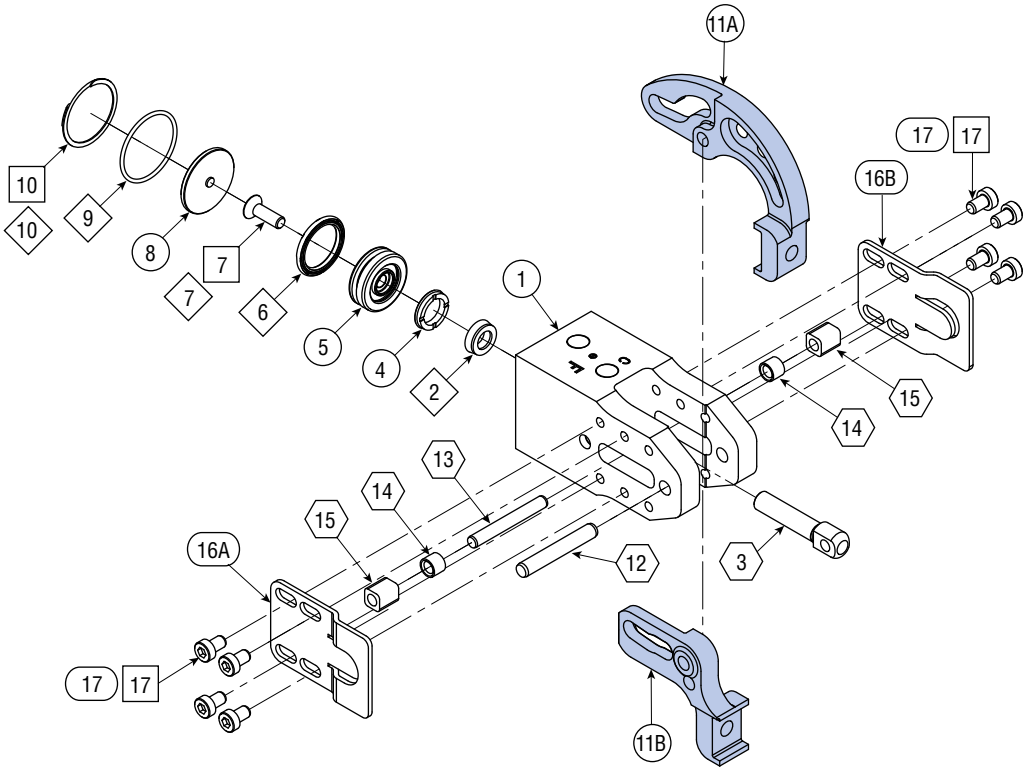

KEY	PART DESCRIPTION		PART NUMBER GRM2xx	PART NUMBER GRM4xx
1	Body	Imperial	63947-11	64627-11
		Metric	63947-12	64627-12
2	Piston Assembly		63949	64631
3	Bore Plug		61467	61468
4	Retaining Ring		57618-034	57618-042
5A	Impact plate		See Jaw Combination Charts	
5B	Impact plate		See Jaw Combination Charts	
6	Rod/Jaw Driver		63950	63969
7	Jaw Bushing		62097	62098
8	Slider Bushing		62099-01	62100
9	Rod/Jaw Driver Pin		52416-009	52416-027
10	Pivot Pin		62176-01	62177-01
11A	Jaw		See Jaw Combination Charts	
11B	Jaw		See Jaw Combination Charts	
12	Rotation Stop Block	Excl. GRM2xN & GRM2xP	See Jaw Combination Charts	
13	Stop Block SHCS	Excl. GRM2xN & GRM2xP	59104-118	59104-118
14	Impact Plate SHCS		59104-114	59104-114
15	Piston SFHCS		59104-600	62221-001
16	Rod Seal		77635-009	78610-006
17	Piston Seal		74042-008	74042-009
18	Bore Plug Seal		3642-027-1	3642-028-1
30	Stroke Reducing Bushing	GRM2xN & GRM2xP Only	See Jaw Combination Charts	

KIT DESCRIPTION		KIT NUMBER GRM2xx	KIT NUMBER GRM4xx
Seal Kit		63965-02	63965-04
Jaw Rebuild Kit(1)		62152-01	62152-02
Fastener Kit		63966-02	63966-04
Impact Plate Kit	No Ear	63967-04	64638-04
	Single Ear	63967-01	64638-01
	Double Ear	63967-02	64638-02

NOTE:

1) Jaw rebuild kits for Pxxxx, Dxxxx, Kxxxx, and PA(B)xxx options can be found in their respective catalog sections.
2) Items shown in □ are included in fastener kit.
3) Items shown in ◇ are included in seal kit.
4) Items shown in ⬡ are included in jaw rebuild kit.
5) Items shown in ⬭ are included in impact plate kit. Impact kit includes: 1 impact plate, 3 SHCS

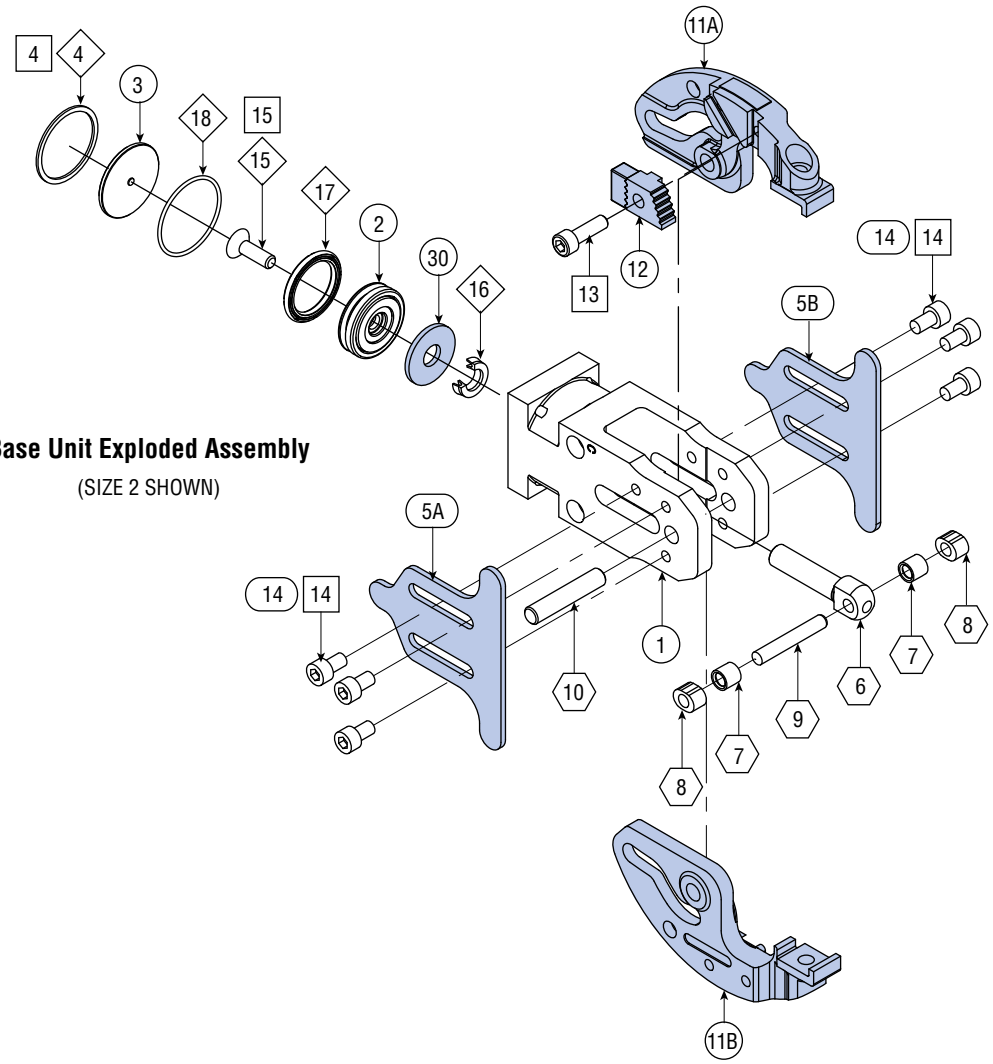

Base Unit Exploded Assembly

(SIZE 2 SHOWN)

EXPLODED ASSEMBLY PARTS
JAW STYLE "S"
SIZES 2 & 4

JAW ROTATION COMBINATION	KEY	PART DESCRIPTION	PART NUMBER	
			GRM2xS	GRM4xS
00-15	5A	Impact Plate	63952-00	—
	5B	Impact Plate	63952-00	—
	11A	Jaw	63953-02	—
	11B	Jaw	65236-02	—
	12	Rotation Stop Block	—	—
00-30	5A	Impact Plate	63952-01	—
	5B	Impact Plate	63952-01	—
	11A	Jaw	63953-02	—
	11B	Jaw	65208-02	—
	12	Rotation Stop Block	—	—
00-22 00-45 00-75	5A	Impact Plate	63952-01	64636-01
	5B	Impact Plate	63952-01	64636-01
	11A	Jaw	63953-02	63976-02
	11B	Jaw	63954-02	63975-02
	12	Rotation Stop Block	63962-03	64635-03
14-30 15-75	5A	Impact Plate	63952-01	—
	5B	Impact Plate	63952-01	—
	11A	Jaw	65236-02	—
	11B	Jaw	63954-02	—
	12	Rotation Stop Block	63962-02	—
15-00	5A	Impact Plate	63952-00	—
	5B	Impact Plate	63952-00	—
	11A	Jaw	65236-02	—
	11B	Jaw	63953-02	—
	12	Rotation Stop Block	—	—
15-15	5A	Impact Plate	63952-00	—
	5B	Impact Plate	63952-00	—
	11A	Jaw	65236-02	—
	11B	Jaw	65236-02	—
	12	Rotation Stop Block	—	—
30-00	5A	Impact Plate	63952-01	—
	5B	Impact Plate	63952-01	—
	11A	Jaw	65208-02	—
	11B	Jaw	63953-02	—
	12	Rotation Stop Block	—	—
30-30	5A	Impact Plate	63952-02	—
	5B	Impact Plate	63952-02	—
	11A	Jaw	65208-02	—
	11B	Jaw	65208-02	—
	12	Rotation Stop Block	—	—
22-45 30-75	5A	Impact Plate	63952-02	—
	5B	Impact Plate	63952-02	—
	11A	Jaw	65208-02	—
	11B	Jaw	63954-02	—
	12	Rotation Stop Block	63962-02	—
22-00 45-00 75-00	5A	Impact Plate	63952-01	64636-01
	5B	Impact Plate	63952-01	64636-01
	11A	Jaw	63954-02	63975-02
	11B	Jaw	63953-02	63976-02
	12	Rotation Stop Block	63962-03	64635-03
11-11 30-14 75-15	5A	Impact Plate	63952-01	—
	5B	Impact Plate	63952-01	—
	11A	Jaw	63954-02	—
	11B	Jaw	65236-02	—
	12	Rotation Stop Block	63962-03	—
45-22 75-30	5A	Impact Plate	63952-02	—
	5B	Impact Plate	63952-02	—
	11A	Jaw	63954-02	—
	11B	Jaw	65208-02	—
	12	Rotation Stop Block	63962-02	—
22-22 45-45 75-75	5A	Impact Plate	63952-02	64636-02
	5B	Impact Plate	63952-02	64636-02
	11A	Jaw	63954-02	63975-02
	11B	Jaw	63954-02	63975-02
	12	Rotation Stop Block	63962-02	64635-02

5A & 5B

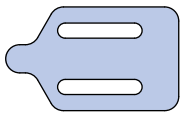

63952-00 (GRM2xS)
64636-00 (GRM4xS)

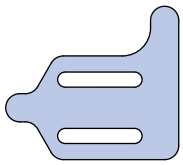

63952-01 (GRM2xS)
64636-01 (GRM4xS)

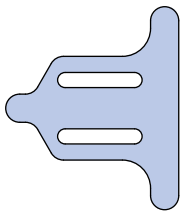

63952-02 (GRM2xS)
64636-02 (GRM4xS)

11A & 11B

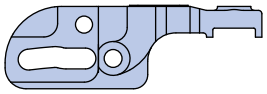

63953-02 (GRM2xS)
63976-02 (GRM4xS)

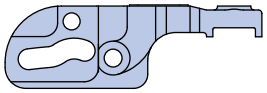

65236-02 (GRM2xS)

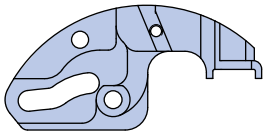

65208-02 (GRM2xS)

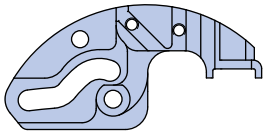

63954-02 (GRM2xS)
63975-02 (GRM4xS)

12

63962-02 (GRM2xS)
64635-02 (GRM4xS)

63962-03 (GRM2xS)
64635-03 (GRM4xS)

Refer to Base Unit Exploded Assembly

JAW ROTATION COMBINATION	KEY	PART DESCRIPTION	PART NUMBER	
			GRM2xC	GRM2xD
00-15	5A	Impact Plate	63952-00	63952-00
	5B	Impact Plate	63952-00	63952-00
	11A	Jaw	63953-02	63953-02
	11B	Jaw	63955-04	63956-04
	12	Rotation Stop Block	—	—
00-75	5A	Impact Plate	63952-01	63952-01
	5B	Impact Plate	63952-01	63952-01
	11A	Jaw	63953-02	63953-02
	11B	Jaw	63957-02	63958-02
	12	Rotation Stop Block	—	—
15-00	5A	Impact Plate	63952-00	63952-00
	5B	Impact Plate	63952-00	63952-00
	11A	Jaw	65236-02	65236-02
	11B	Jaw	63955-02	63956-02
	12	Rotation Stop Block	—	—
15-15	5A	Impact Plate	63952-00	63952-00
	5B	Impact Plate	63952-00	63952-00
	11A	Jaw	65236-02	65236-02
	11B	Jaw	63955-04	63956-04
	12	Rotation Stop Block	—	—
15-75	5A	Impact Plate	63952-01	63952-01
	5B	Impact Plate	63952-01	63952-01
	11A	Jaw	65236-02	65236-02
	11B	Jaw	63957-02	63958-02
	12	Rotation Stop Block	—	—
30-00	5A	Impact Plate	63952-00	63952-00
	5B	Impact Plate	63952-00	63952-00
	11A	Jaw	65208-02	65208-02
	11B	Jaw	63955-02	63956-02
	12	Rotation Stop Block	—	—
30-15	5A	Impact Plate	63952-00	63952-00
	5B	Impact Plate	63952-00	63952-00
	11A	Jaw	65208-02	65208-02
	11B	Jaw	63955-04	63956-04
	12	Rotation Stop Block	—	—
22-45 30-75	5A	Impact Plate	63952-02	63952-02
	5B	Impact Plate	63952-02	63952-02
	11A	Jaw	65208-02	65208-02
	11B	Jaw	63957-02	63958-02
	12	Rotation Stop Block	63962-02	63962-02
22-00 45-00 75-00	5A	Impact Plate	63952-01	63952-01
	5B	Impact Plate	63952-01	63952-01
	11A	Jaw	63954-02	63954-02
	11B	Jaw	63955-02	63956-02
	12	Rotation Stop Block	63962-03	63962-03
11-11 30-14 75-15	5A	Impact Plate	63952-01	63952-01
	5B	Impact Plate	63952-01	63952-01
	11A	Jaw	63954-02	63954-02
	11B	Jaw	63955-04	63956-04
	12	Rotation Stop Block	63962-03	63962-03
22-22 45-45 75-75	5A	Impact Plate	63952-02	63952-02
	5B	Impact Plate	63952-02	63952-02
	11A	Jaw	63954-02	63954-02
	11B	Jaw	63957-02	63958-02
	12	Rotation Stop Block	63962-02	63962-02

5A & 5B

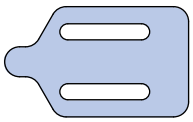

63952-00

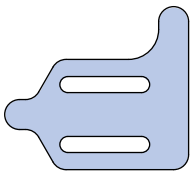

63952-01

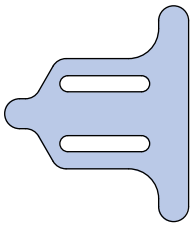

63952-02

12

63962-02

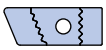

63962-03

11A

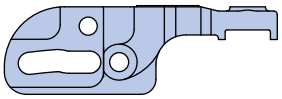

63953-02

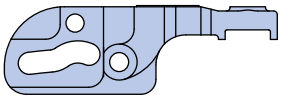

65236-02

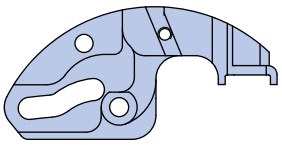

65208-02

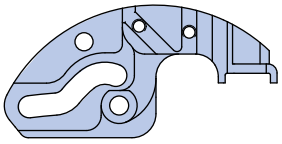

63954-02

11B

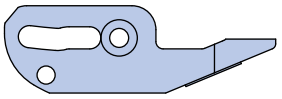

63955-02 (GRM2xC)
63956-02 (GRM2xD)

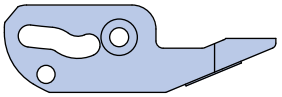

63955-04 (GRM2xC)
63956-04 (GRM2xD)

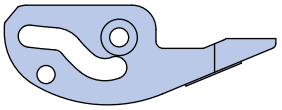

63957-02 (GRM2xC)
63958-02 (GRM2xD)

Refer to Base Unit Exploded Assembly

EXPLODED ASSEMBLY PARTS
JAW STYLE "G"
SIZES 2 & 4

JAW ROTATION COMBINATION	KEY	PART DESCRIPTION	PART NUMBER	
			GRM2xG	GRM4xG
00-18	11A	Jaw	63990-01	—
	11B	Jaw	63989-02	—
	12	Rotation Stop Block	63962-03	—
00-40	11A	Jaw	63990-01	65218-01
	11B	Jaw	63989-02	65217-01
	12	Rotation Stop Block	63962-02	64635-02
00-70	11A	Jaw	—	65218-01
	11B	Jaw	—	65217-01
	12	Rotation Stop Block	—	64635-02
11-11	11A	Jaw	63989-02	—
	11B	Jaw	63989-02	—
	12(1)	Rotation Stop Block	63962-03	—
18-00	11A	Jaw	63989-02	—
	11B	Jaw	63990-01	—
	12	Rotation Stop Block	63962-03	—
40-00	11A	Jaw	63989-02	65217-01
	11B	Jaw	63990-01	65218-01
	12	Rotation Stop Block	63962-02	64635-02
70-00	11A	Jaw	—	65217-01
	11B	Jaw	—	65218-01
	12	Rotation Stop Block	—	64635-02
22-22 40-40	11A	Jaw	63989-02	65217-01
	11B	Jaw	63989-02	65217-01
	12(1)	Rotation Stop Block	63962-02	64635-02
70-70	11A	Jaw	—	65217-01
	11B	Jaw	—	65217-01
	12(1)	Rotation Stop Block	—	64635-02

Note:
1) Two rotation stop blocks required.

5A & 5B

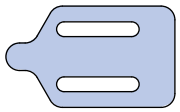

63952-00 (GRM2xG)
64636-00 (GRM4xG)

12

63962-02 (GRM2xG)
64635-02 (GRM4xG)

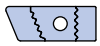

63962-03 (GRM2xG)
64635-03 (GRM4xG)

11A

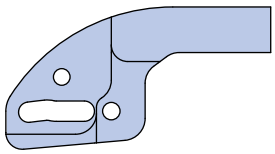

63990-01 (GRM2xG)
65218-01 (GRM4xG)

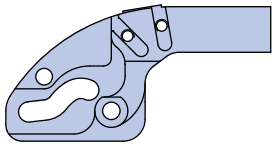

63989-02 (GRM2xG)
65217-01 (GRM4xG)

11B

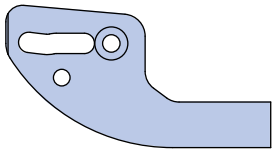

63990-01 (GRM2xG)
65218-01 (GRM4xG)

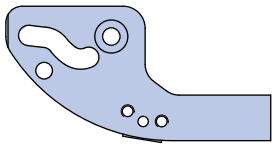

63989-02 (GRM2xG)
65217-01 (GRM4xG)

Refer to Base Unit Exploded Assembly

JAW ROTATION COMBINATION	KEY	PART DESCRIPTION	PART NUMBER			
			GRM2xH	GRM2xJ	GRM4xH	GRM4xJ
15-00	5A	Impact Plate	63952-00	63952-00	—	—
	5B	Impact Plate	63952-00	63952-00	—	—
	11A	Jaw	65236-02	65236-02	—	—
	11B	Jaw	65233-02	65234-02	—	—
	12	Rotation Stop Block	—	—	—	—
30-00	5A	Impact Plate	63952-00	63952-00	—	—
	5B	Impact Plate	63952-00	63952-00	—	—
	11A	Jaw	65208-02	65208-02	—	—
	11B	Jaw	65233-02	65234-02	—	—
	12	Rotation Stop Block	—	—	—	—
22-00	5A	Impact Plate	63952-01	63952-01	64636-01	64636-01
	5B	Impact Plate	63952-01	63952-01	64636-01	64636-01
45-00	11A	Jaw	63954-02	63954-02	63975-02	63975-02
75-00	11B	Jaw	65233-02	65234-02	63977-02	63978-02
	12	Rotation Stop Block	63962-03	63962-03	64635-03	64635-03

11A

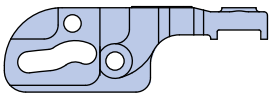

65236-02 (GRM2xH(J))

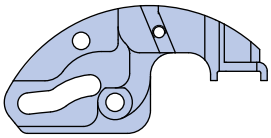

65208-02 (GRM2xH(J))

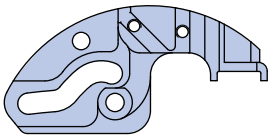

63954-02 (GRM2xH(J))
63975-02 (GRM4xH(J))

5A & 5B

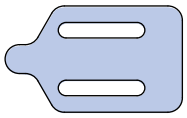

63952-00 (GRM2xH(J))
64636-00 (GRM4xH(J))

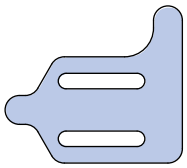

63952-01 (GRM2xH(J))
64636-01 (GRM4xH(J))

11B

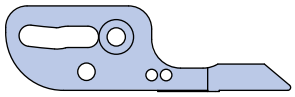

65233-02 (GRM2xH)
63977-02 (GRM2xH)

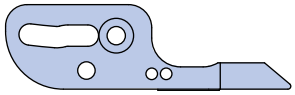

65234-02 (GRM2xJ)
63978-02 (GRM4xJ)

12

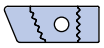

63962-03 (GRM2xH(J))
64635-03 (GRM4xH(J))

Refer to Base Unit Exploded Assembly

EXPLODED ASSEMBLY PARTS
JAW STYLES “N” & “P”
SIZE 2

JAW ROTATION COMBINATION	KEY	PART DESCRIPTION	PART NUMBER	
			GRM2xN	GRM2xP
00-12	11A	Jaw	65213-02	65215-02
	11B	Jaw	65214-02	65216-02
	30	Stroke Reducing Bushing	65420-002	65420-002
00-22	11A	Jaw	65213-02	65215-02
	11B	Jaw	65214-02	65216-02
00-45	11A	Jaw	65213-02	65215-02
	11B	Jaw	65243-02	65244-02
	30	Stroke Reducing Bushing	65420-002	65420-002
00-75	11A	Jaw	65213-02	65215-02
	11B	Jaw	65243-02	65244-02
12-00	11A	Jaw	65214-02	65216-02
	11B	Jaw	65213-02	65215-02
	30	Stroke Reducing Bushing	65420-002	65420-002
12-12	11A	Jaw	65214-02	65216-02
	11B	Jaw	65214-02	65216-02
	30	Stroke Reducing Bushing	65420-002	65420-002
12-45	11A	Jaw	65214-02	65216-02
	11B	Jaw	65243-02	65244-02
	30	Stroke Reducing Bushing	65420-002	65420-002
22-00	11A	Jaw	65214-02	65216-02
	11B	Jaw	65213-02	65215-02
22-22	11A	Jaw	65214-02	65216-02
	11B	Jaw	65214-02	65216-02
22-75	11A	Jaw	65214-02	65216-02
	11B	Jaw	65243-02	65244-02
45-00	11A	Jaw	65243-02	65244-02
	11B	Jaw	65213-02	65215-02
	30	Stroke Reducing Bushing	65420-002	65420-002
45-12	11A	Jaw	65243-02	65244-02
	11B	Jaw	65214-02	65216-02
	30	Stroke Reducing Bushing	65420-002	65420-002
45-45	11A	Jaw	65243-02	65244-02
	11B	Jaw	65243-02	65244-02
	30	Stroke Reducing Bushing	65420-002	65420-002
75-00	11A	Jaw	65243-02	65244-02
	11B	Jaw	65213-02	65215-02
75-22	11A	Jaw	65243-02	65244-02
	11B	Jaw	65214-02	65216-02
75-75	11A	Jaw	65243-02	65244-02
	11B	Jaw	65243-02	65244-02

5A & 5B

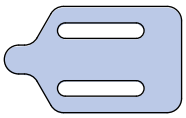

63952-00

30

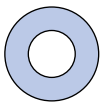

65420-002

11A & 11B

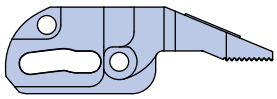

65213-02 (GRM2xN)
65215-02 (GRM2xP)

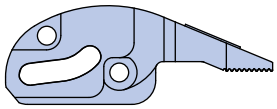

65214-02 (GRM2xN)
65216-02 (GRM2xP)

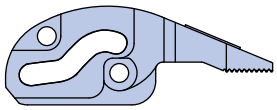

65243-02 (GRM2xN)
65244-02 (GRM2xP)

Refer to Base Unit Exploded Assembly

JAW ROTATION COMBINATION	KEY	PART DESCRIPTION	PART NUMBER GRM2xR
00-22 00-45 00-60	5A	Impact Plate	63952-01
	5B	Impact Plate	63952-01
	11A	Jaw	79533-02
	11B	Jaw	79532-02
	12	Rotation Stop Block	74388
22-00 45-00 60-00	5A	Impact Plate	63952-01
	5B	Impact Plate	63952-01
	11A	Jaw	79532-02
	11B	Jaw	79533-02
	12	Rotation Stop Block	74388
22-22 35-35 45-45 60-60	5A	Impact Plate	63952-02
	5B	Impact Plate	63952-02
	11A	Jaw	79532-02
	11B	Jaw	79532-02
	12	Rotation Stop Block	74388

5A & 5B

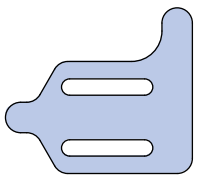

63952-01

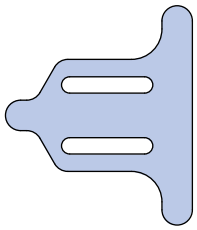

63952-02

11A & 11B

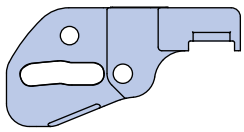

79533-02

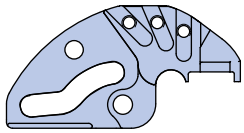

79532-02

12

74388

Refer to Base Unit Exploded Assembly

KEY	PART DESCRIPTION		PART NUMBER	
			GRM2Tx	GRM4TF
1	Body	Imperial	63972-11	64629-11
		Metric	63972-12	64629-12
2	Piston Assembly		63949	64631
3	Bore Plug		61467	61468
4	Retaining Ring		57618-034	57618-042
5A	Cover Plate		63974	64634
5B	Impact Plate (F)		63952-01	64636-01
	Impact Plate (K)		64659-01	—
6	Rod/Jaw Driver		63950	63969
7	Jaw Bushing		62097	62098
8	Slider Bushing		62099-01	62100
9	Rod/Jaw Driver Pin		52416-009	52416-027
10	Pivot Pin		62176-02	62177-02
11A	Jaw (F)	50°, 85°	63961-02	63983-01
	Jaw (K)	25°, 50°	64654-01	—
11B	Jaw (F)	0°	63959-02	63981-01
	Jaw (F)	22.5°	63960-02	—
	Jaw (K)	0°	64656-01	—
	Jaw (K)	20°, 40°	64655-01	—
12	Stop Block	All F Jaw Rotations, 25° x 20°, 50° x 40° (K) Jaw Rotations	63962-02	64635-02
		50° x 0° (K) Jaw Rotations	63962-03	—
13	Stop Block SHCS		59104-118	59104-118
14	Impact Plate SHCS		59104-114	59104-114
15	Piston SFHCS		59104-600	62221-001
16	Rod Seal		77635-009	78610-006
17	Piston Seal		74042-008	74042-009
18	Bore Plug Seal		3642-027-1	3642-028-1

KIT DESCRIPTION		KIT NUMBER	
		GRM2Tx	GRM4TF
Seal Kit		63965-02	63965-04
Jaw Rebuild Kit(1)		62152-03	62152-04
Fastener Kit		63966-02	63966-04
Impact Plate Kit	GRMxxF	63967-03	64638-03
	GRMxxK	63967-06	—

NOTE:

1) Jaw rebuild kits for Pxxxx, Dxxxx, and PA(B)xxx options can be found in their respective catalog sections.
2) Items shown in □ are included in fastener kit.
3) Items shown in ◇ are included in seal kit.
4) Items shown in ⬡ are included in jaw rebuild kit.
5) Items shown in ⬭ are included in impact plate kit.

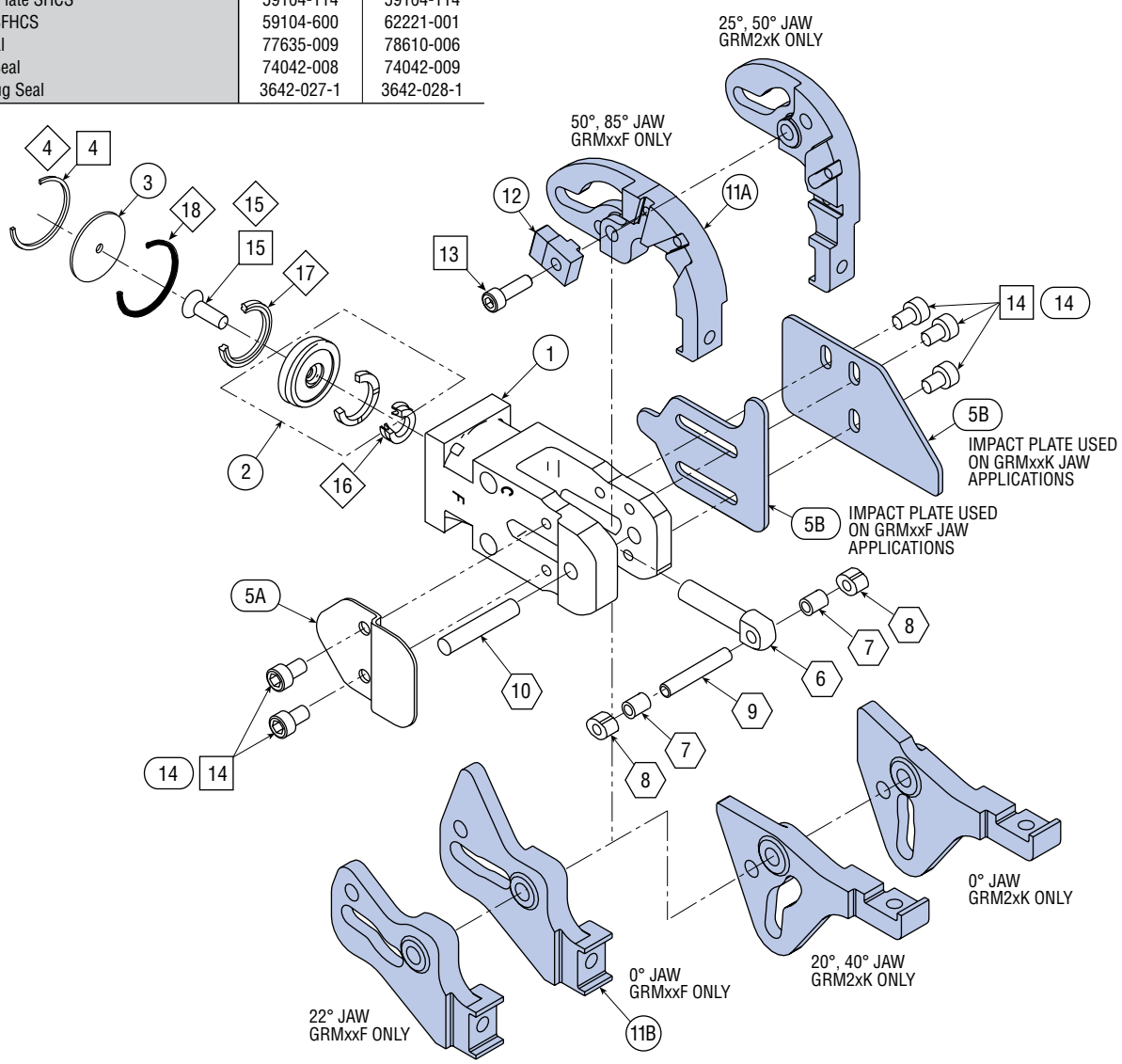

KEY	PART DESCRIPTION		PART NUMBER GRM2TL
1	Body	Imperial	73059-01
		Metric	73059-02
2	Piston & Shock Pad		63949
3	Bore Plug		61467
4	Retaining Ring		57618-034
5A	Impact Plate		63952-01
5B	Impact Plate		63952-01
6	Rod/Jaw Driver		73061-01
7	Jaw Bushing		62097
8	Slider Bushing		62099-01
9	Rod/Jaw Driver Pin		52416-059
10	Pivot Pin		62176-02
11A	Jaw (L & M)		73062-02
11B	Jaw (L)		73064-01
	Jaw (M)		73063-01
12	Stop Block		73065-01
13	Stop Block Pin		17831-169
14	Impact Plate SHCS		59104-114
15	Piston SFHCS		59104-600
16	Rod Seal		77635-009
17	Piston Seal		74042-008
18	Bore Plug Seal		3642-027-1
19	Jaw Mounting Pin		17831-009
20	Jaw Mounting SHCS		59104-115
21	Jaw Mounting Socket Set Screw		17424-103

KIT DESCRIPTION	KIT NUMBER GRM2TL
Seal Kit	63965-02
Jaw Rebuild Kit(1)	62152-07
Fastener Kit	63966-06
Impact Plate Kit	63967-01

NOTE:

1) Jaw rebuild kits for Pxxxx, Dxxxx, and Kxxxx options can be found in their respective catalog sections.
2) Items shown in □ are included in fastener kit.
3) Items shown in ◇ are included in seal kit.
4) Items shown in ⬡ are included in jaw rebuild kit.
5) Items shown in ⬭ are included in impact plate kit. Impact kit includes: 1 impact plate, 3 SHCS

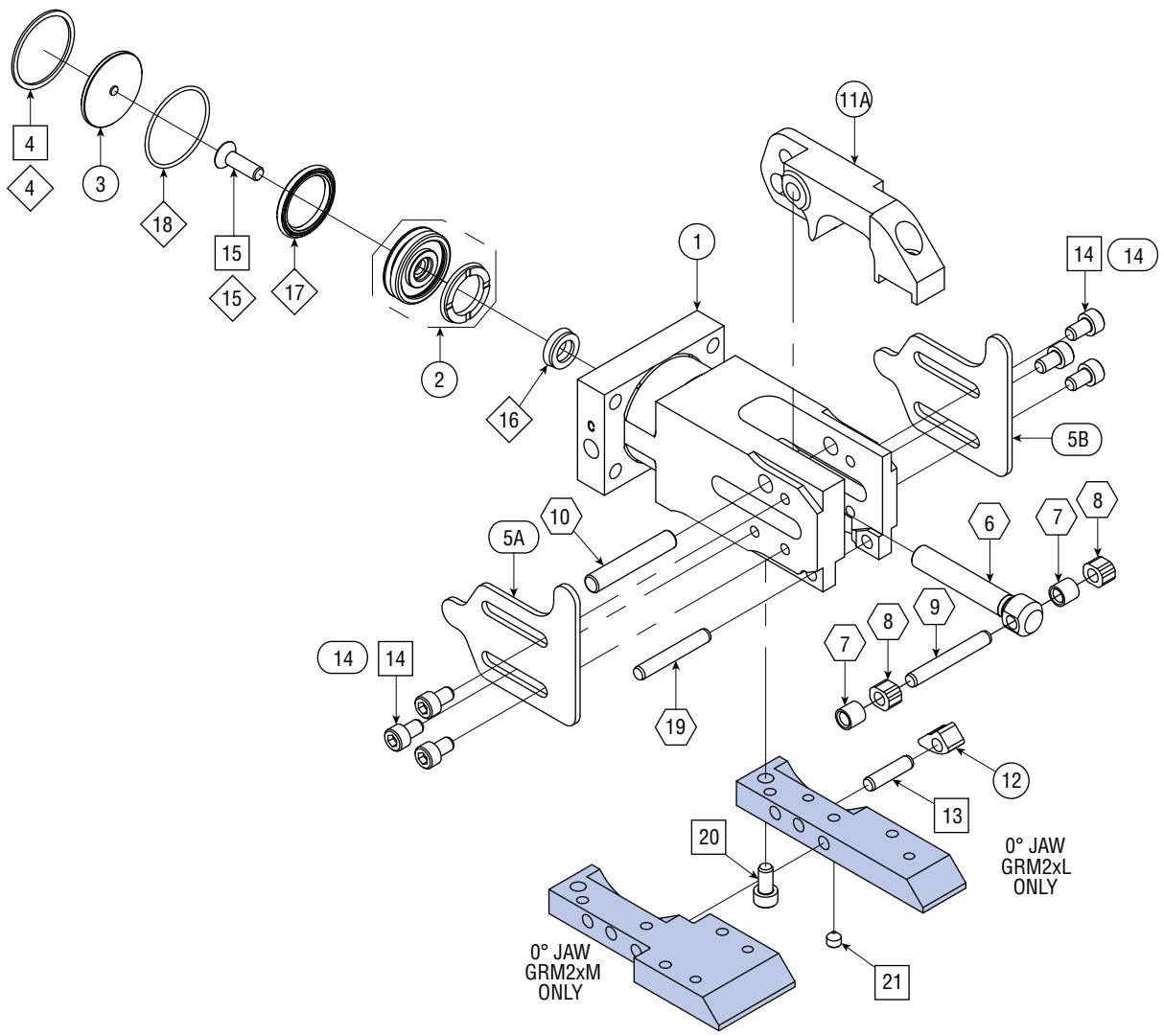

REBUILD
REPAIR
RECYCLE

Rebuild or repair your GRM Clamps for significantly less cost than the original price.

When you are using our standard GRM clamps and your program or project has ended, send them back to us. We will evaluate your GRM clamps and rebuild them to like-new condition (when possible) for significantly less than the cost of a new unit. All PHD rebuilt units will have a new warranty, increasing the value.

What happens to the GRM clamps that are judged to be beyond repair? We can send them back to you for your disposal. That way you can be sure that no one is playing games with your money.

There is a another benefit to this program...it's green. These actuators do not end up in the dump, which saves energy and resources required to produce new units.

For further information, contact your local distributor or

PHD, Inc. Customer Service
800-624-8511

SOLUTIONS FOR INDUSTRIAL AUTOMATION

PNC *Number Cruncher®*

Benefits

- Provides cost effective solution for stamping identification characters into parts or metal
- High clamp force produces characters in draw quality steel at 70 psi [4.8 bar]
- Operates quietly in less than 0.24 seconds
- Many accessories available

Series PNC
Automated stamping for part identification

PFC *Frame Clamp*

Benefits

- Ideal for heavy parts clamping
- Rugged cam design provides consistent clamping force throughout a wide power window
- Wide jaw throat accommodates large parts with simple tooling
- Tooling surface has dowels and threads to NAAMS™ NC blocks

Series PFC
Heavy parts clamping

PS *Reach and Pick*

Benefits

- Pneumatic slide and clamp are powered with only one external valve
- Clamp jaws stay open until slide is fully extended
- Clamp can be spherically adjusted to match panel
- Uses standard Series GRM Clamps and accessories
- Clamp jaws remain closed if pressure is lost

Series PS
Pneumatic loading and unloading of panels with one valve

PEC *Arm Over*

Benefits

- Superior part holding
- Cam design provides widest range of high clamping force in its class
- Available in three sizes
- Multiple output shaft options for mounting arms on either or both sides
- Weld field immune switch option provides consistent position sensing

Series PEC
Superior part holding in assembly and welding environments

For more information on our clamp products, order at:

www.phdinc.com/resources/inforequest/

(800) 624-8511
www.phdinc.com/grm

phd SOLUTIONS FOR INDUSTRIAL AUTOMATION

PA/PB/PC *Swing Arm*

Benefits

- Simple design, compact size, for low weight, long life, and high clamp force make these clamps ideal for part holding or transfer
- Series PA are available in five sizes
- Series PB are available in four sizes
- Series PC have tapered rod end for easy arm angle adjustment
- Available in left and right rotations

Series PA
Work holding in a welding environment

Series PB
Wide variety of automated part holding and transfer applications

Series PC
MRO drop-in replacement unit opportunity

PLK/PLKD *Pin Locating*

Benefits

- Enclosed finger protects against weld slag and contamination
- Short pin length ideal for blind applications
- 5 or 10 mm clamping strokes
- Available in four standard pin sizes
- NAAMS™ mounting
- Open or closed position sensing with industry standard AC or DC weld field immune switches
- Lightweight construction facilitates mounting on robots
- Series PLKD's main pin retracts fully into part support

Series PLKD
Pin retracts below part support

Series PLK
Part clamping in weld areas

PLC *Pin Locating*

Benefits

- Ideal for part clamping in weld areas
- Completely enclosed design
- Available in two sizes, with up to six pin size choices and two pin styles
- 12.5 mm of clamping stroke allows shimming part support for easy height setup

Series PLC
Part clamping in weld areas

PHL *Heavy Lifter*

Benefits

- Simple design, compact size, long life, and the ability to handle high off-center loads
- Available as drop-in replacement for General Motors Global Die Standards, (GMGDS) 90.35.05-A and B
- Built-in rod compliance eliminates side load on cylinder piston rod thus increasing life

Series PHL
Automated, high load part lifting applications

PNEUMATIC, HYDRAULIC & ELECTRIC PRODUCTS FOR INDUSTRIAL AUTOMATION

- Cylinders
- Powered Slides
- Rotary Actuators
- Escapements
- Grippers
- Multi-Motion Actuators
- Clamps
- Switches
- Optimax®
- PHD Plus®

phd®

SOLUTIONS FOR INDUSTRIAL AUTOMATION

WORLD HEADQUARTERS:
PHD, Inc.
9009 Clubridge Drive
P.O. Box 9070
Fort Wayne, IN 46899 U.S.A.
Phone (260) 747-6151
Fax (260) 747-6754
phdinfo@phdinc.com

EUROPE OFFICE:
PHDinEurope GmbH
Zum Carl-Alexander-Park 6
52499 Baesweiler, Germany
Phone +49 (0)2401 619 77 0
Fax +49 (0)2401 619 77 99
info@PHDinEurope.de

中国办事处:
北京市西城区西直门外大街1号院
西环广场A座15层A3
邮编: 100044
电话: 86-10-5830 1122-825
传真: 86-10-5830 1500
电邮: jwei@phdinc.com

INDIA OFFICE:
335, Udyog Vihar, Phase-IV
Gurgaon - 122015. India
Phone : +91-124-4356451
Fax : +91-124-4308207
msaxena@phdinc.com

4M-I 800-A4 2/1/16 8922